SECTION DI
DRIVER INFORMATION SYSTEM

CONTENTS

PRECAUTIONS

PFP:00011

Precautions for Supplemental Restraint System (SRS) “AIR BAG” and “SEAT BELT PRE-TENSIONER”

AKS004Z4

The Supplemental Restraint System such as “AIR BAG” and “SEAT BELT PRE-TENSIONER”, used along with a front seat belt, helps to reduce the risk or severity of injury to the driver and front passenger for certain types of collision. This system includes seat belt switch inputs and dual stage front air bag modules. The SRS system uses the seat belt switches to determine the front air bag deployment, and may only deploy one front air bag, depending on the severity of a collision and whether the front occupants are belted or unbelted.
Information necessary to service the system safely is included in the SRS and SB section of this Service Manual.

WARNING:

- **To avoid rendering the SRS inoperative, which could increase the risk of personal injury or death in the event of a collision which would result in air bag inflation, all maintenance must be performed by an authorized NISSAN/INFINITI dealer.**
- **Improper maintenance, including incorrect removal and installation of the SRS, can lead to personal injury caused by unintentional activation of the system. For removal of Spiral Cable and Air Bag Module, see the SRS section.**
- **Do not use electrical test equipment on any circuit related to the SRS unless instructed to in this Service Manual. SRS wiring harnesses can be identified by yellow and/or orange harnesses or harness connectors.**

Wiring Diagrams and Trouble Diagnosis

AKS004Z5

When you read wiring diagrams, refer to the following:

- Refer to GI-14, "How to Read Wiring Diagrams" in GI section
- Refer to PG-2, "POWER SUPPLY ROUTING" for power distribution circuit in PG section

When you perform trouble diagnosis, refer to the following:

- Refer to GI-10, "HOW TO FOLLOW TEST GROUPS IN TROUBLE DIAGNOSES" in GI section
- Refer to GI-26, "How to Perform Efficient Diagnosis for an Electrical Incident" in GI section

PREPARATION

PFP:00002

Commercial Service Tools

AKS003VD

Tool name	Description
Power tool 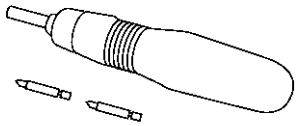 PBIC0191E	Loosening bolts and nuts

COMBINATION METERS

PFP:24814

System Description

AKS002HM

UNIFIED CONTROL METER

- Speedometer, odo/trip meter, tachometer, fuel gauge and water temperature gauge are controlled totally by control unit built in combination meter.
- Digital meter is adopted for odo/trip meter.*
  *The record of the odo meter is kept even if the battery cable is disconnected. The record of the trip meter is erased when the battery cable is disconnected.
- Odo/trip meter, A/T indicator and ICC system display segments can be checked in self-diagnosis mode.
- Meter/gauge can be checked in self-diagnosis mode.

HOW TO CHANGE THE DISPLAY FOR ODO/TRIP METER

- The CAN communication signals (vehicle speed signal) from VDC/TCS/ABS control unit, and the memory signals from the meter memory circuit are processed by the combination meter, and the mileage is displayed.
- Operating the odo/trip meter switch allows switching the mode in the following order.

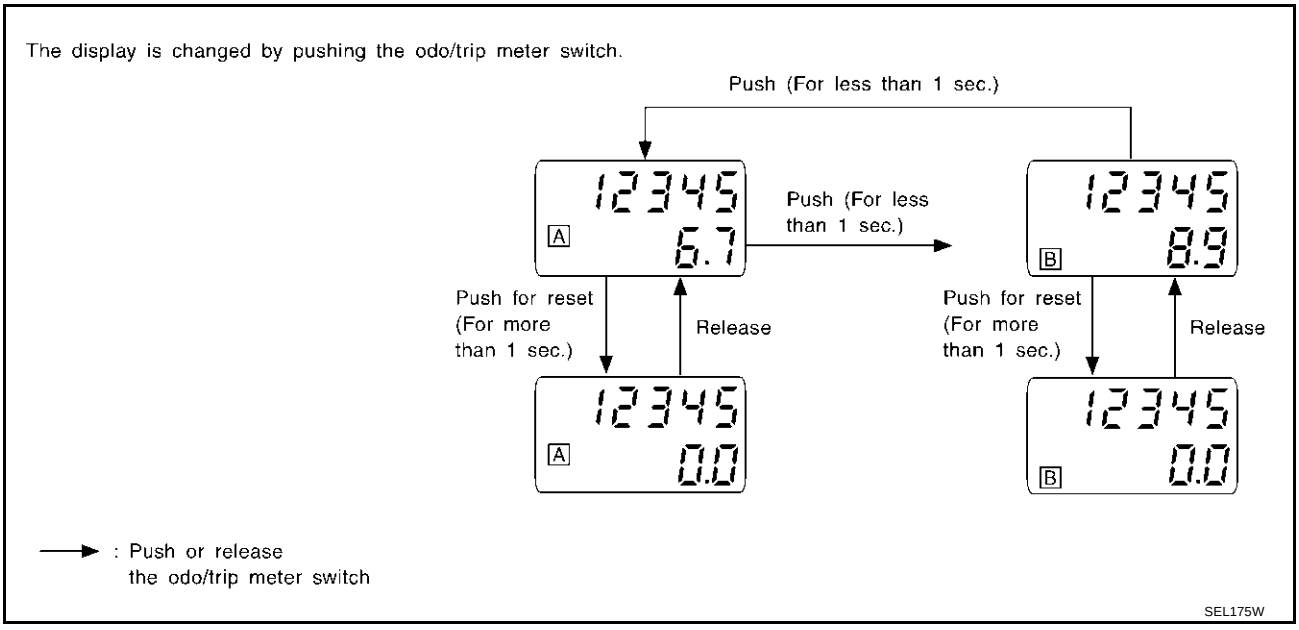

- The odometer/trip display switching and trip display resetting can be identified by the time from pressing the odometer/trip switch to releasing it.
- When resetting with trip A displayed, only trip A display is reset (same as trip B).

POWER SUPPLY AND GROUND CIRCUIT

Power is supplied at all times

- through 10A fuse [No. 6, located in the fuse block (J/B) NO. 1]
- to combination meter terminal 39.

With the ignition switch in the ON or START position, power is supplied

- through 10A fuse [No. 9, located in the fuse block (J/B) NO. 1]
- to combination meter terminals 40 and 42.

With the ignition switch in the ACC or ON position, power is supplied

- through 10A fuse [No. 21, located in the fuse block (J/B) NO. 1]
- to combination meter terminal 28.

Ground is supplied

- to combination meter terminals 20 and 33
- through body grounds M24 and M114.

WATER TEMPERATURE GAUGE

The water temperature gauge indicates the engine coolant temperature.
ECM provides an engine coolant temperature signal to combination meter for water temperature gauge with CAN communication line.

TACHOMETER

The tachometer indicates engine speed in revolution per minutes (rpm).
ECM provides a engine speed signal to combination meter for tachometer with CAN communication line.

FUEL GAUGE

The fuel gauge indicates the approximate fuel level in the fuel tank.
The fuel gauge is regulated by a variable resister signal supplied

- to combination meter terminal 30 for the fuel level sensor
- from terminal 5 of the fuel level sensor unit
- through terminal 6 of the fuel level sensor unit and
- through combination meter terminal 31.

SPEEDOMETER

VDC/TCS/ABS control unit provides a vehicle speed signal to the combination meter for the speedometer with CAN communication line.

CAN Communication

AKS002HN

SYSTEM DESCRIPTION

CAN (Controller Area Network) is a serial communication line for real time application. It is an on-vehicle multiplex communication line with high data communication speed and excellent error detection ability. Many electronic control units are equipped onto a vehicle, and each control unit shares information and links with other control units during operation (not independent). In CAN communication, control units are connected with 2 communication lines (CAN H line, CAN L line) allowing a high rate of information transmission with less wiring. Each control unit transmits/receives data but selectively reads required data only.

WITH ICC SYSTEM

System diagram

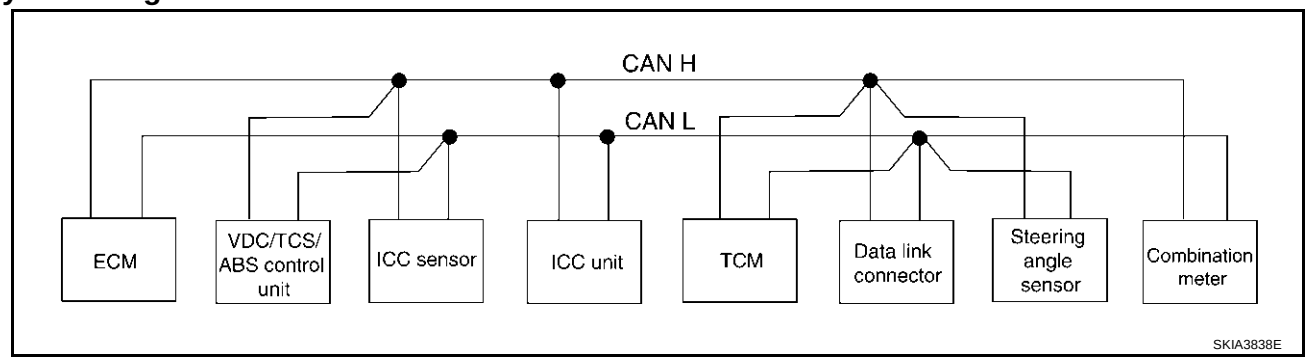

Input/output signal chart

T: Transmit R: Receive

Signals	ECM	VDC/ TCS/ABS control unit	ICC sensor	ICC unit	TCM	Steering angle sensor	Combination meter
ICC system display signal				T			R
ICC sensor signal			T	R			
ICC operation signal				T	R		
Engine speed signal	T	R		R	R		R
Engine coolant temperature signal	T			R			R
Accelerator pedal position signal	T	R		R	R		
Engine torque signal	T	R			R		
Battery voltage signal	T				R		
Closed throttle position signal	T			R	R		
Wide open throttle position signal	T				R		
Engine and A/T integrated control signal	T				R		
	R				T		
Fuel consumption monitor signal	T						R
A/T CHECK indicator signal					T		R
A/T position indicator signal					T		R
Current gear position signal	R	R		R	T		R
Next gear position signal	R	R		R	T		
Shift change signal	R	R			T		
Shift pattern signal	R			R	T		
VDC operation signal	R	T		R			
Stop lamp switch signal					R		T
Steering angle sensor signal		R				T	
Air conditioner switch signal	R						T

Signals	ECM	VDC/ TCS/ABS control unit	ICC sen-sor	ICC unit	TCM	Steering angle sensor	Combina-tion meter
Headlamp switch signal	R						T
Rear window defogger switch signal	R						T
OD cancel switch signal		R					T
Vehicle speed signal		T		R			R
	R				R		T
Output shaft revolution signal	R			R	T		
ABS operation signal	R	T		R	R		
TCS operation signal	R	T		R			
A/T shift schedule change demand signal		T			R		
Manual mode signal				R	R		T
Not manual mode signal					R		T
Manual mode shift up signal					R		T
Manual mode shift down signal					R		T
Manual mode indicator signal					T		R

WITHOUT ICC SYSTEM

System diagram

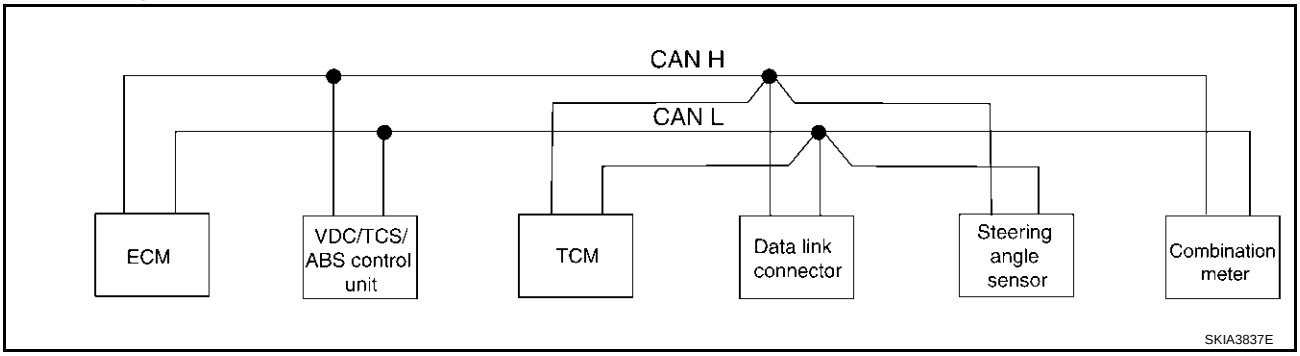

Input/output signal chart

T: Transmit R: Receive

Signals	ECM	VDC/TCS/ABS control unit	TCM	Steering angle sensor	Combination meter
Engine speed signal	T	R	R		R
Engine coolant temperature signal	T				R
Accelerator pedal position signal	T	R	R		
Engine torque signal	T	R	R		
Battery voltage signal	T		R		
Closed throttle position signal	T		R		
Wide open throttle position signal	T		R		
Engine and A/T integrated control signal	T		R		
	R		T		
Fuel consumption monitor signal	T				R
A/T CHECK indicator signal			T		R
A/T position indicator signal			T		R
Current gear position signal	R	R	T		R
Next gear position signal	R	R	T		

Signals	ECM	VDC/TCS/ABS control unit	TCM	Steering angle sensor	Combination meter
Shift change signal	R	R	T		
Shift pattern signal	R		T		
VDC operation signal	R	T			
Stop lamp switch signal			R		T
Steering angle sensor signal		R		T	
Air conditioner switch signal	R				T
Headlamp switch signal	R				T
Rear window defogger switch signal	R				T
OD cancel switch signal		R			T
Vehicle speed signal		T			R
	R		R		T
Output shaft revolution signal	R		T		
ABS operation signal	R	T	R		
TCS operation signal	R	T			
A/T shift schedule change demand signal		T	R		
ASCD operation signal	R		R		T
Overdrive cancel signal	R		R		T
Manual mode signal			R		T
Not manual mode signal			R		T
Manual mode shift up signal			R		T
Manual mode shift down signal			R		T
Manual mode indicator signal			T		R

Component Parts and Harness Connector Location

AKS002HO

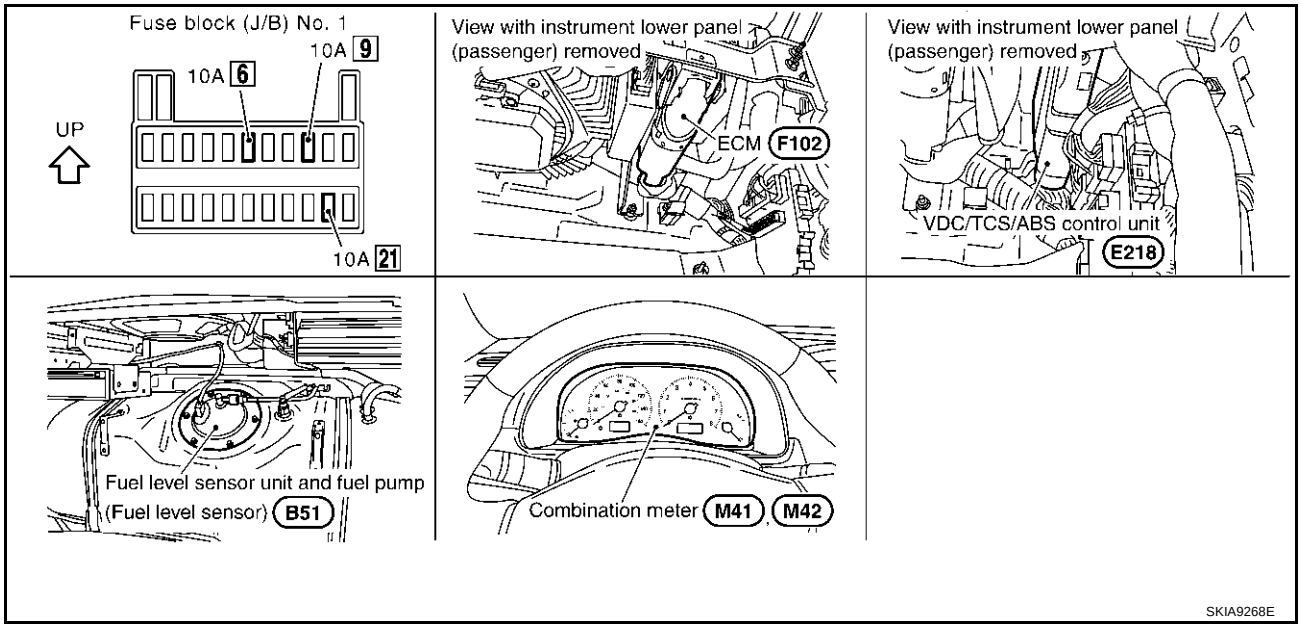

Combination Meter
CHECK

AKS002HP

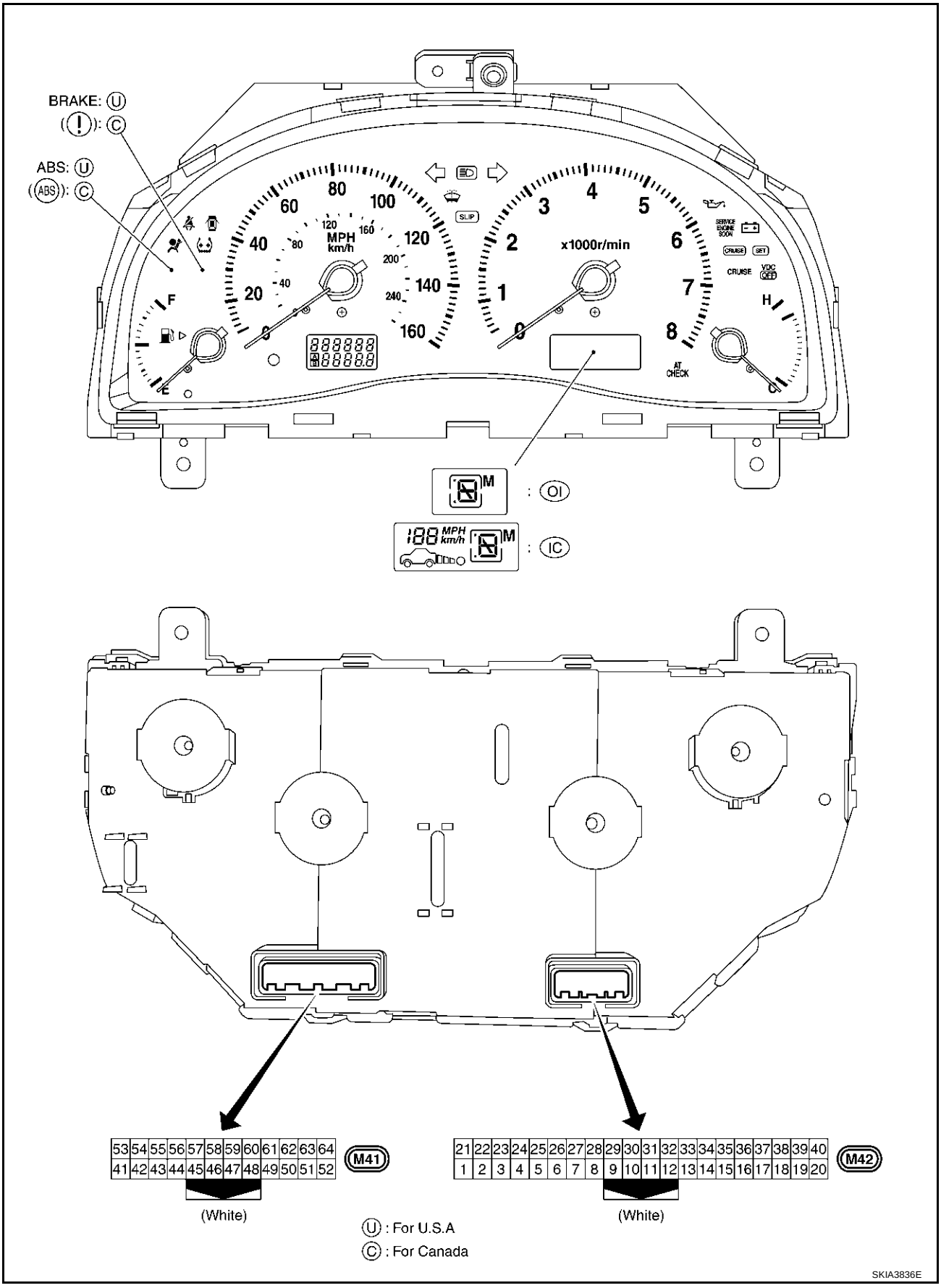

Schematic

AKS002HR

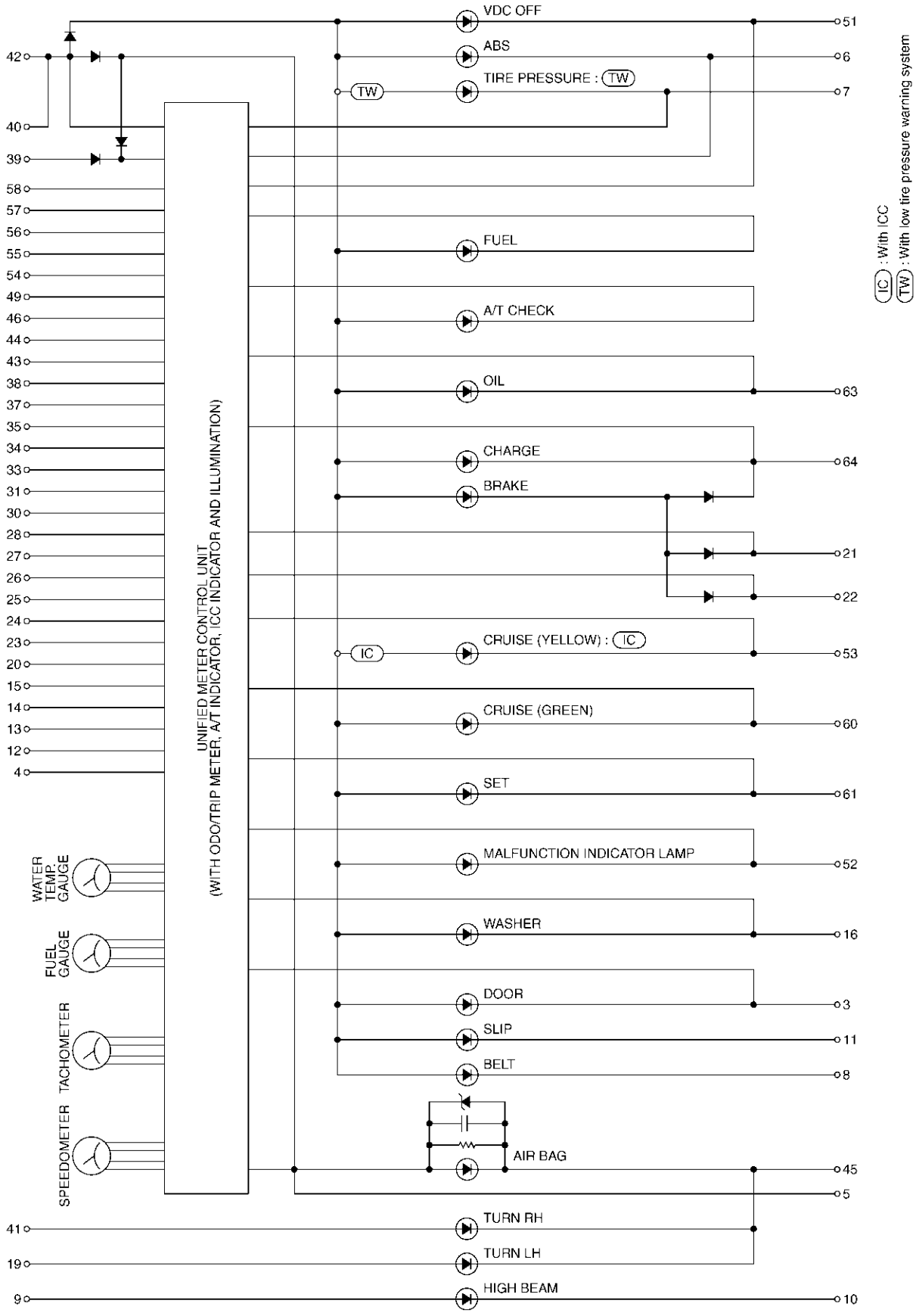

TKWA0578E

Wiring Diagram — METER —

AKS002HS

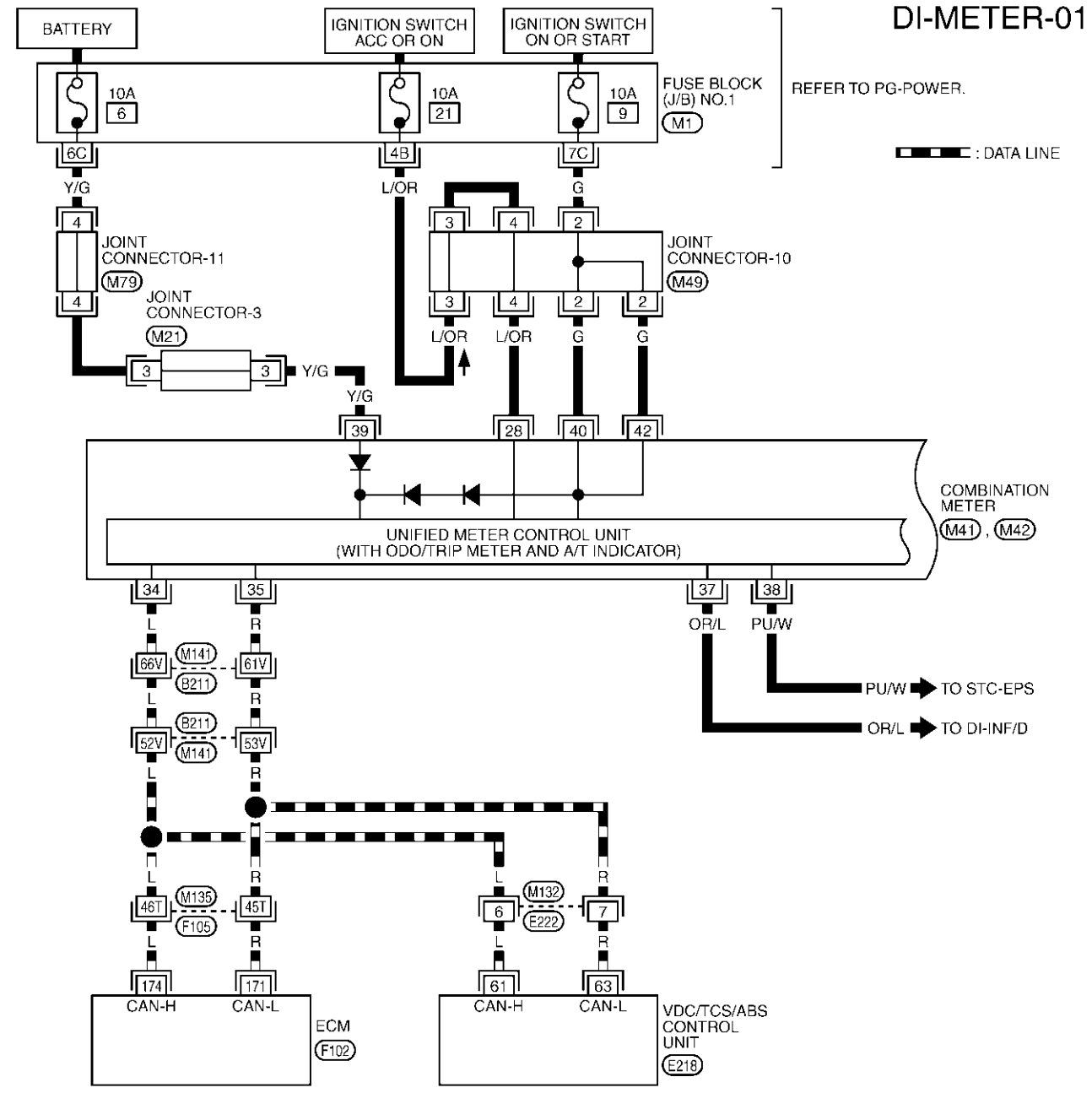

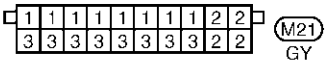

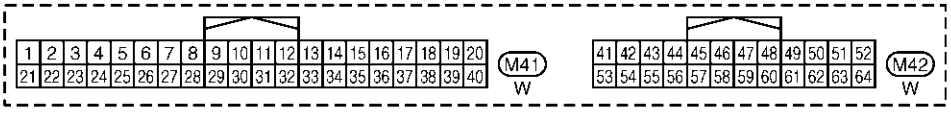

REFER TO THE FOLLOWING.
F105 , B211 -SUPER MULTIPLE JUNCTION (SMJ)
M1 -FUSE BLOCK-JUNCTION BOX (J/B) NO.1
E218 , F102 -ELECTRICAL UNITS

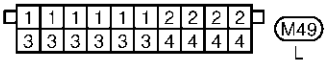

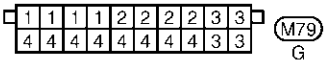

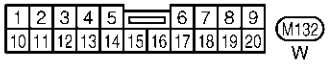

TKWA0579E

DI-METER-02

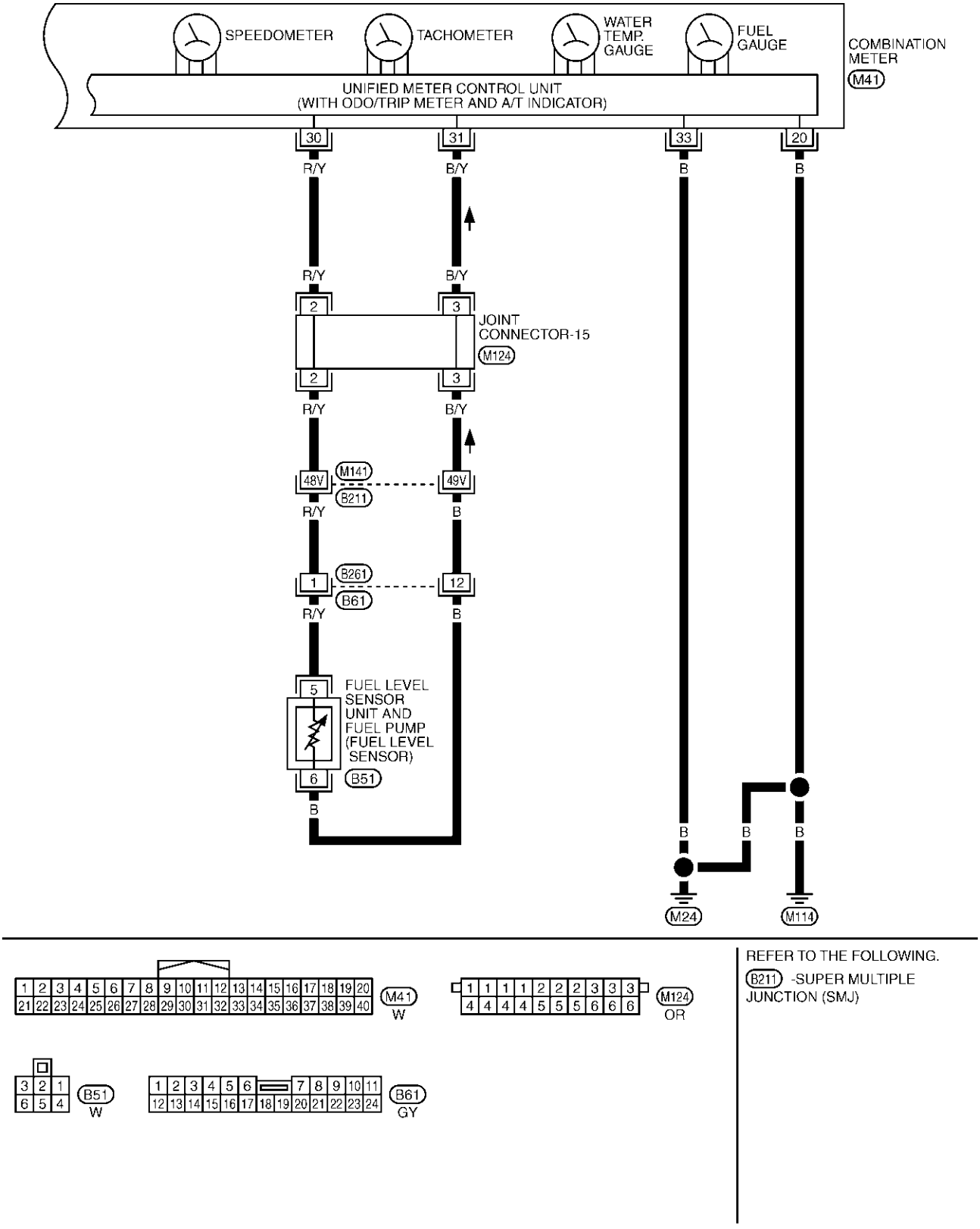
SPEEDOMETER
TACHOMETER
WATER TEMP. GAUGE
FUEL GAUGE
COMBINATION METER
M41
UNIFIED METER CONTROL UNIT
(WITH ODO/TRIP METER AND A/T INDICATOR)
30
31
33
20
R/Y
B/Y
B
JOINT CONNECTOR-15
M124
2
3
48V
49V
M141
B211
1
12
B261
B61
5
6
FUEL LEVEL SENSOR UNIT AND FUEL PUMP (FUEL LEVEL SENSOR)
B51
M24
M114
REFER TO THE FOLLOWING.
B211 -SUPER MULTIPLE JUNCTION (SMJ)
W
OR
GY
TKWA0580E

Terminals and Reference Value for Combination Meter

AKS002HU

Terminal No.	Wire color	Item	Condition		Reference value
			Ignition switch	Operation	
20	B	Ground	ON	—	Approx. 0V
28	L/OR	Ignition switch (ACC)	ACC	—	Battery voltage
30	R/Y	Fuel level senor signal	ON	—	Refer to DI-24, "Electrical Components Inspection" .
31	B/Y	Fuel level sensor ground	ON	—	—
33	B	Ground	ON	—	Approx. 0V
34	L	CAN H	—	—	—
35	R	CAN L	—	—	—
37	OR/L	Vehicle speed signal (8-pulse)	ON	Speedometer operated [When vehicle speed is approx. 40km/h (25MPH)]	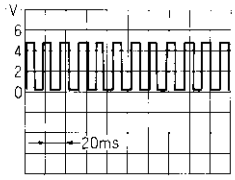 ELF1084D
38	PU/W	Vehicle speed signal (2-pulse)	ON	Speedometer operated [When vehicle speed is approx. 40km/h (25MPH)]	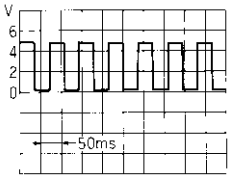 ELF1080D
39	Y/G	Battery source (BAT)	OFF	—	Battery voltage
40	G	Ignition switch (ON)	ON	—	Battery voltage
42					

Meter/Gauges Operation, Odo/Trip Meter, A/T Indicator and ICC System Display

AKS002HV

SELF–DIAGNOSIS FUNCTION

- Odo/trip meter segment, A/T indicator segment and ICC system display can be checked in self-diagnosis mode.
- Meters/gauges can be checked in self-diagnoses mode.

HOW TO ALTERNATE DIAGNOSIS MODE

1. Turn ignition switch ON, and switch the odo/ trip meter to “trip A” or “trip B”.

   NOTE:
   If the diagnosis function is activated with the trip meter A displayed, the mileage on the trip meter A is reset to 0.0km (same as the trip meter B display).
2. Turn ignition switch OFF.
3. While pushing the odo/trip meter switch, turn ignition switch ON again.
4. Check that the trip meter displays “0000.0”.
5. Push the odo/trip meter switch at least 3 times. (Within 7 seconds after the ignition switch is turned ON.)

6. All the segments on the odo/trip meter, A/T indicator and ICC system display illuminate, and simultaneously the low-fuel warning lamp indicator illuminate. At this time, the unified control meter is turned to diagnosis mode.

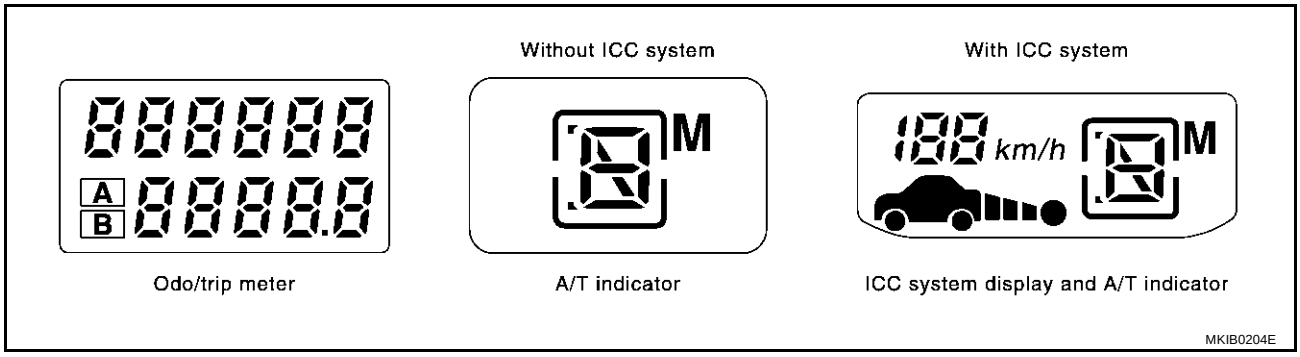

NOTE:
If any of the segments is not displayed, replace the odo/trip meter and A/T indicator with the speedometer assembly.

7. Push the odo/trip meter switch. Indication of each meter/gauge should be as shown in the right during pushing odo/trip meter switch if there is no malfunctioning. (at this time, the low-fuel warning lamp goes off).

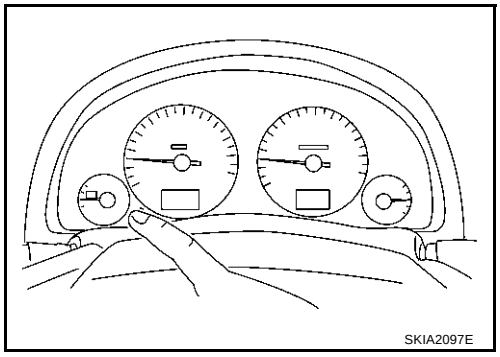

How to Proceed With Trouble Diagnosis

AKS002VG

1. Confirm the trouble symptom or customer complaint.
2. Perform diagnosis according to diagnosis flow. Refer to DI-16, "Diagnosis Flow" .
3. According to the trouble diagnosis chart, repair or replace the cause of the trouble symptom. Refer to DI-19, "Trouble Diagnosis Chart by Symptom" .
4. Does the meter operate normally? Yes: Go to 5. No: Go to 2.
5. Inspection end.

Diagnosis Flow

AKS002VH

1. CHECK WARNING LAMP ILLUMINATION

1. Turn ignition switch ON.
2. Make sure that warning lamps (such as MIL and oil pressure warning lamp) illuminate.

Do warning lamps illuminate?

YES >> O TO 2.
NO >> Check ignition power supply system of combination meter. Refer to DI-18, "Power Supply and Ground Circuit Inspection" .

2. CHECK SELF-DIAGNOSIS OPERATION

Perform combination meter self-diagnosis. Refer to DI-15, "SELF–DIAGNOSIS FUNCTION" .

Does self-diagnosis function operate?

YES >> GO TO 3.
NO >> Check battery power supply of combination meter and ground system. Refer to DI-18, "Power Supply and Ground Circuit Inspection" .

3. CHECK ODO/TRIP METER OPERATION

Check segment display status of odo/trip meter. Refer to DI-15, "SELF–DIAGNOSIS FUNCTION" .

Is the display normal?

YES >> GO TO 4.
NO >> Replace combination meter.

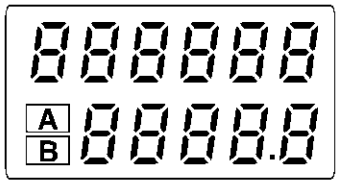

SEL176W

4. CHECK FUEL WARNING LAMP ILLUMINATION

During fuel warning lamp check, confirm illumination of fuel warning lamp.

Condition of odo/trip meter switch	Fuel warning lamp
Pushed	Does not illuminate.
Released	Illuminates.

OK or NG

OK >> GO TO 5.
NG >> Replace combination meter.

5. CHECK METER CIRCUIT

Check indication of each meter/gauge in self-diagnosis mode. Refer to DI-15, "SELF–DIAGNOSIS FUNCTION" .

OK or NG

OK >> Go to diagnosis results. Refer to DI-19, "DIAGNOSIS RESULTS" .
NG >> Replace combination meter.

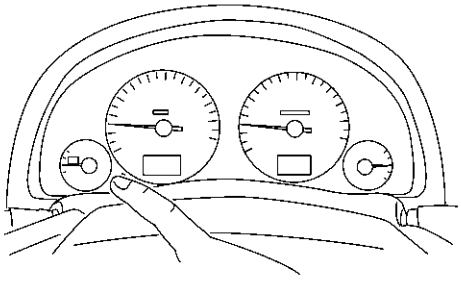
SKIA2097E

Power Supply and Ground Circuit Inspection

AKS002HY

1. CHECK FUSES

Check that any of the fuses in combination meter is blown.

Unit	Power source	Fuse No.
Combination meter	Battery	6
	Ignition switch ON or START	9
	Ignition switch ACC or ON	21

OK or NG

OK >> GO TO 2.
NG >> If fuse is blown, be sure to eliminate cause of problem before installing new fuse. Refer to PG-2, "POWER SUPPLY ROUTING" .

2. CHECK POWER SUPPLY CIRCUIT

1. Disconnect the combination meter connector.
2. Check voltage between combination meter and ground.

Terminals			Ignition switch position		
(+)		(–)	OFF	ACC	ON
Connector	Terminal (Wire color)				
M41	28 (L/OR)	Ground	0V	Battery voltage	Battery voltage
	39 (Y/G)		Battery voltage	Battery voltage	Battery voltage
	40 (G)		0V	0V	Battery voltage
M42	42 (G)				

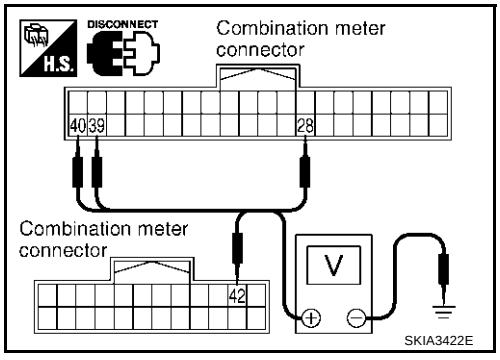

OK or NG

OK >> GO TO 3.
NG >> Check harness for open or short between combination meter and fuse.

3. CHECK GROUND CIRCUIT

1. Turn ignition switch OFF.
2. Check continuity between combination meter harness connector M41 terminals 20 (B), 33 (B) and ground.

Continuity should exist.

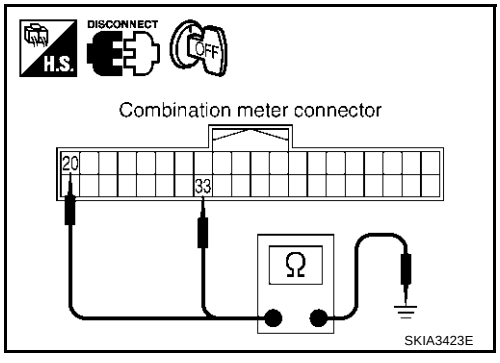

OK or NG

OK >> Inspection end.
NG >> Check ground harness.

Trouble Diagnosis Chart by Symptom

AKS002VL

DIAGNOSIS RESULTS

Trouble phenomenon	Possible cause
Fuel warning lamp indication is irregular.	Replace combination meter.
Indication is malfunction for one of the following: tachometer, fuel gauge, or water temperature gauge	● Refer to DI-20, "Inspection/Fuel Level Sensor Unit" . ● Refer to DI-19, "Inspection/Engine Speed Signal" . ● Refer to DI-19, "Inspection/Water Temperature Signal" .
Indication is irregular for the speedometer and odo/trip meter.	Refer to DI-19, "Inspection/Vehicle Speed Signal" .
Indications are irregular for more than one gauge.	Replace combination meter.
A/T position indicator is malfunction.	Refer to DI-51, "A/T Indicator Does Not Illuminate" .
ICC system display does not illuminate.	Refer to ACS-58, "TROUBLE DIAGNOSIS — GENERAL DESCRIPTION" .

Inspection/Engine Speed Signal

AKS002VI

1. CHECK ECM SELF-DIAGNOSIS

Perform ECM self-diagnosis. Refer to EC-52, "Emission-related Diagnostic Information" .

OK or NG

OK >> Replace combination meter.
NG >> Perform “Diagnostic procedure” displayed DTC.

Inspection/Water Temperature Signal

AKS002VJ

1. CHECK ECM SELF-DIAGNOSIS

Preform the ECM self-diagnosis. Refer to EC-52, "Emission-related Diagnostic Information" .

OK or NG

OK >> Replace combination meter.
NG >> Perform “Diagnostic procedure” displayed DTC.

Inspection/Vehicle Speed Signal

AKS002VK

1. CHECK VDC/TCS/ABS CONTROL UNIT SELF-DIAGNOSIS

Perform VDC/TCS/ABS control unit self-diagnosis. Refer to BRC-13, "TROUBLE DIAGNOSIS" .

OK or NG

OK >> Replace combination meter.
NG >> Perform “Diagnostic procedure” displayed self-diagnosis results.

Inspection/Fuel Level Sensor Unit

AKS002I3

FUEL LEVEL SENSOR UNIT

The following symptoms do not indicate a malfunction.

- Depending on vehicle posture or driving circumstance, the fuel level in the tank various, and the pointer may fluctuate.
- If the vehicle is fueled with the ignition switch ON, the pointer will move slowly.
- If vehicle is tilted when the ignition switch is turned ON, fuel in the tank may flow to one direction resulting in a change in the reading.

LOW-FUEL WARNING LAMP

Depending on vehicle posture or driving circumstance, the fuel level in the tank varies, and the warning lamp ON timing may be changed.

1. CHECK SELF-DIAGNOSIS

Preform the combination meter self–diagnosis mode. Refer to DI-15, "Meter/Gauges Operation, Odo/Trip Meter, A/T Indicator and ICC System Display" .

OK or NG

OK >> GO TO 2.
NG >> Replace combination meter.

2. CHECK HARNESS CONNECTOR

1. Turn ignition switch OFF.
2. Check combination meter, fuel level sensor unit and terminals (meter-side, module-side, lead-side, and harness-side) for poor connection and bend.

OK or NG

OK >> GO TO 3.
NG >> Repair terminal or connector.

3. CHECK HARNESS CONNECTOR OUTPUT SIGNAL

1. Disconnect fuel level sensor connector.
2. Turn ignition switch ON.
3. Check voltage between combination meter harness connector M41 terminal 30 (R/Y) and ground.

Approx. 5V

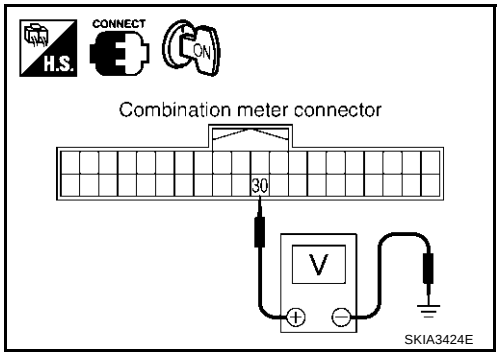

OK or NG

OK >> GO TO 4.
NG >> Replace combination meter.

4. CHECK HARNESS FOR OPEN OR SHORT CIRCUIT

1. Turn ignition switch OFF.
2. Disconnect combination meter connector.
3. Check the following.

– Continuity between combination meter harness connector M41 terminal 30 (R/Y) and fuel level sensor unit harness connector B51 terminal 5 (R/Y)

Continuity should exist.

– Continuity between combination meter harness connector M41 terminal 30 (R/Y) and ground

Continuity should not exist.

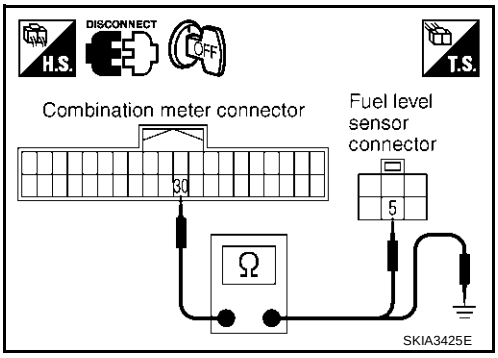

OK or NG

OK >> GO TO 5.
NG >> Repair harness or connector.

5. CHECK FUEL LEVEL SENSOR GROUND CIRCUIT

Check the following.

- Continuity between combination meter harness connector M41 terminal 31 (B/Y) and fuel level sensor unit harness connector B51 terminal 6 (B)

Continuity should exist.

- Continuity between combination meter harness connector M41 terminal 31 (B/Y) and ground

Continuity should not exist.

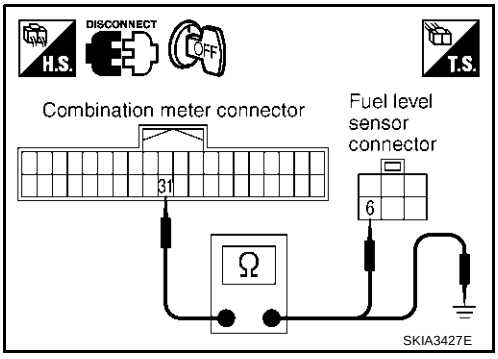

OK or NG

OK >> GO TO 6.
NG >> Repair harness or connector.

6. CHECK FUEL LEVEL SENSOR UNIT

Check the components. Refer to DI-24, "CHECK FUEL LEVEL SENSOR UNIT" .

OK or NG

OK >> GO TO 7.
NG >> Replace fuel level sensor unit.

7. CHECK INSTALLATION CONDITION

Check fuel level sensor unit installation, and check whether the float arm interferes or binds with any components inside the arm.

OK or NG

OK >> Replace combination meter.
NG >> Install fuel level sensor unit properly.

Fuel Gauge Pointer Fluctuates·Indicator Wrong Value·or Varies

AKS002I4

1. CHECK FUEL GAUGE POINTER FOR FLUCTUATION

Does the indication value fluctuate during driving or before/after stop?

Does the indication value vary?

YES >> The pointer fluctuation may be caused by fuel level change in the fuel tank.
NO >> Ask the customer about the situation when the symptom occurs in detail, and Preform the trouble diagnosis.

Fuel Gauge Does Not Move to FULL Position

AKS002I5

1. QUESTION 1

Does it take a long time for the pointer to move to FULL position?

YES or NO

YES >> GO TO 2.
NO >> GO TO 3.

2. QUESTION 2

Was the vehicle fueled with the ignition switch ON?

YES or NO

YES >> Be sure to fuel the vehicle with the ignition switch OFF. Otherwise it will take a long time to move to FULL position because of the characteristic of the fuel gauge.
NO >> GO TO 3.

3. QUESTION 3

Is the floor or the vehicle inclined?

YES or NO

YES >> It may not be filled fully.
NO >> GO TO 4.

4. QUESTION 4

During driving, does the fuel gauge pointer move gradually toward EMPTY position?

YES or NO

YES >> Check the components. Refer to DI-20, "FUEL LEVEL SENSOR UNIT" .
NO >> The float arm may interfere or bind with any of the components in the fuel tank.

Fuel Gauge Does Not Work

AKS002I6

1. CHECK HARNESS CONNECTOR

Check combination meter, fuel level sensor unit, and terminals (meter-side, unit-side and harness-side) for poor connection and bend.

OK or NG

OK >> GO TO 2.
NG >> Repair terminals or connector.

2. CHECK INSTALLATION CONDITION

Check fuel level sensor unit installation (refer to FL-3, "FUEL LEVEL SENSOR UNIT, FUEL FILTER AND FUEL PUMP ASSEMBLY" , and check whether the float arm interferes or binds with any components inside the arm.

OK or NG

OK >> Check fuel level sensor unit. Refer to DI-20, "Inspection/Fuel Level Sensor Unit" .
NG >> Install fuel level sensor unit properly.

Low-Fuel Warning Lamp Illuminate or Not Illuminate

AKS002I7

1. CHECK SELF-DIAGNOSIS

Preform combination meter self-diagnosis mode. Refer to DI-15, "Meter/Gauges Operation, Odo/Trip Meter, A/T Indicator and ICC System Display" .

OK or NG

OK >> Check fuel level sensor unit. Refer to DI-20, "FUEL LEVEL SENSOR UNIT" .
NG >> Replace combination meter.

Electrical Components Inspection

AKS002I9

CHECK FUEL LEVEL SENSOR UNIT

- For removal, refer to FL-3, "FUEL LEVEL SENSOR UNIT, FUEL FILTER AND FUEL PUMP ASSEMBLY" .
- Check the resistance between terminals 5 and 6.

Terminal		Float position mm (in)		Resistance value Ω
5	6	Full (3)	Approx. 82.7 (3.3)	Approx. 4.5 - 5.5
		1/2 (2)	Approx. 200.3 (7.9)	Approx. 31.5 - 35.5
		Empty (1)	Approx. 325.0 (12.8)	Approx. 80.0 - 83.0

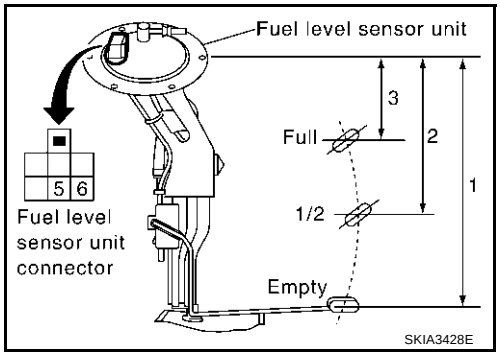

Removal and Installation of Combination Meter

AKS002IA

REMOVAL

1. Remove cluster lid A. Refer to IP-10, "INSTRUMENT PANEL ASSEMBLY" .
2. Remove screws (3) with power tool, and disconnect connectors.

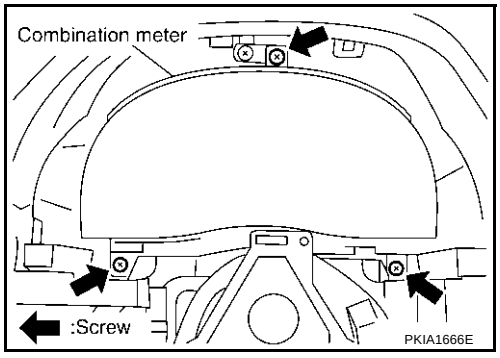

3. While pulling combination meter upper-side forward, pull it out.

   CAUTION:
   To prevent it from being damaged by interference with the meter bracket, protect the meter with cloth.

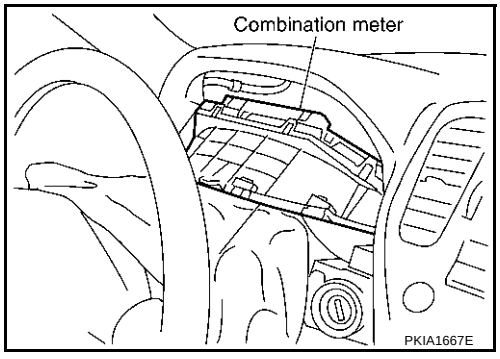

INSTALLATION

Install in the reverse order of removal.

Disassembly and Assembly of Combination Meter

AKS002IB

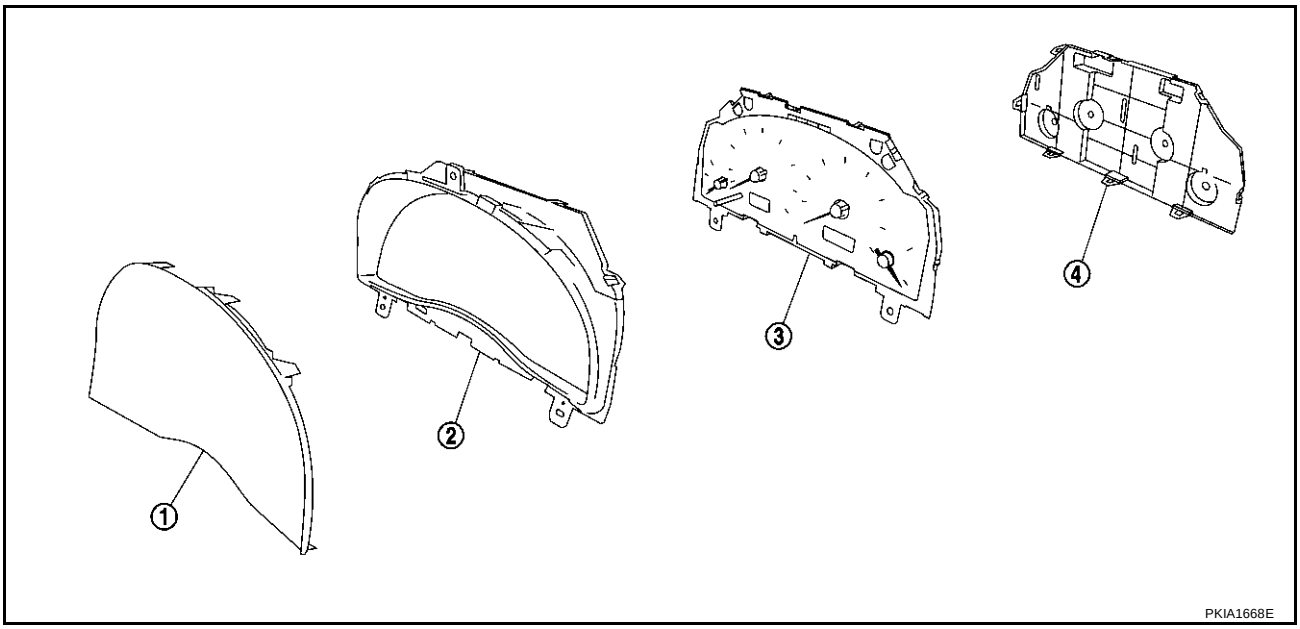

1. Front cover
2. Upper housing
3. Unified meter control unit assembly
4. Meter cover

1. Disengage tabs (8) to separate meter cover.
2. Disengage tabs (8) to separate upper housing.
3. Disengage tabs (8) to separate front cover.

COMPASS

PFP:24835

System Description

AKS003ZP

This unit displays earth magnetism and heading direction of vehicle.

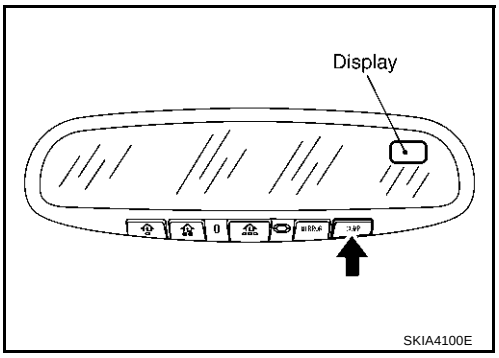

DIRECTION DISPLAY

Push the switch when the ignition key is in the “ON” or “START” position. The direction will be displayed. Pushing the “COMP” switch a second time will turn off the display.

1. If the display reads “C” calibrate the compass by driving the vehicle in 3 complete circles at less than 8km/h (5MPH).
2. To adjust for Compass Variance:

a. Press the “COMP” switch for more than 3 seconds. The current zone number will appear in the display.

b. Find your current location and variance zone number on the zone map.

c. Press the “COMP” switch until the new zone number appears in the display. After you stop pressing the button in, the display will show a compass direction within a few seconds.

NOTE:

1. Do not install the ski rack, antenna, etc. which are attached to the vehicle by means of a magnet. They affect the operation of the compass.
2. If the compass deviates from the correct indication soon after repeated adjustment, have the compass checked at an authorized dealer.
3. The compass may not indicate the correct compass point in tunnels or while driving up or down a steep hill. (The compass returns to the correct compass point when the vehicle moves to an area where the geomagnetism is stabilized.)

3. Cleaning the Mirror
   When cleaning the mirror, use a paper towel or similar mate-rial dampened with glass cleaner. Do not spray glass cleaner directly on the mirror as that may cause the liquid cleaner to enter the mirror housing.

“C” is displayed in the compass window.

The compass needs to be calibrated. Drive the vehicle in 3 circles at 8km/h (5MPH) or less until the display reads a direction. You can also calibrate the compass by driving your vehicle on your everyday routine. The compass will be calibrated once it has tracked 3 complete circles.

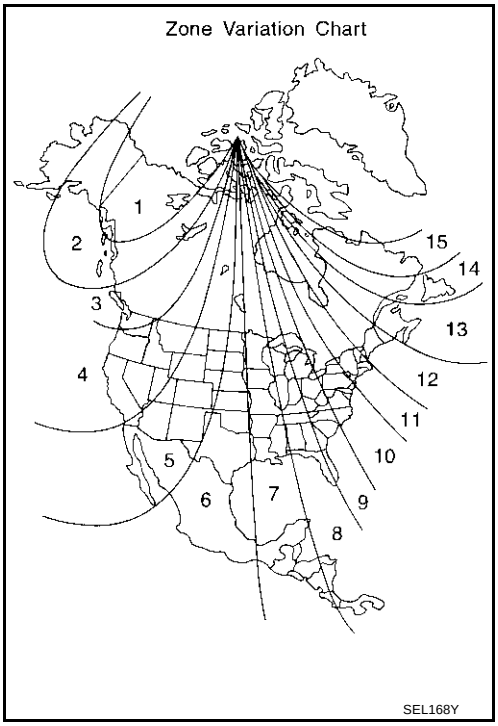

Inaccurate compass direction

1. With the display turned on, push the “COMP” switch for 3 seconds, until the Zone selection comes up (a number will be displayed in the mirror compass window).
2. Toggle until correct zone is found and release switch.
3. The display will show all segments, and return to the normal compass mode within 10 seconds of no switch activity.
4. If the vehicle changes zone, repeat steps 1 through 3. See map.

Wiring Diagram – COMPAS –

AKS003LW

DI-COMPAS-01

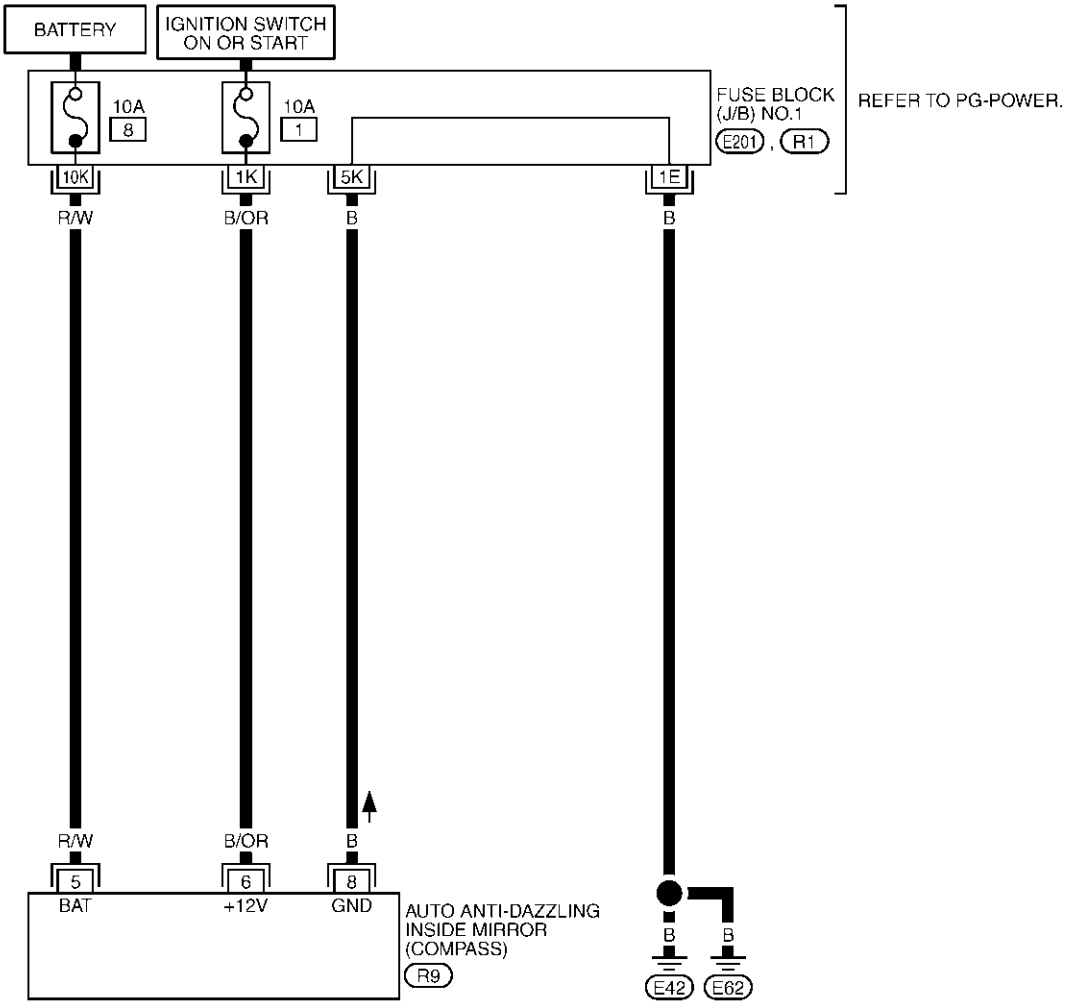

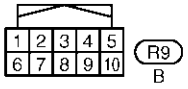

REFER TO THE FOLLOWING.
E201 , R1 -FUSE BLOCK-JUNCTION BOX (J/B) NO.1

TKWA0619E

Removal and Installation of Compass

AKS0040J

Refer to GW-59, "Removal and Installation" .

WARNING LAMPS

PFP:24814

System Description

AKS002IC

OUTLINE

Power is supplied at all times

- through 10A fuse [No. 6, located in the fuse block (J/B) NO.1]
- to combination meter terminal 39.

With ignition switch in the ON or START position, power is supplied

- through 10A fuse [No. 9, located in the fuse block (J/B) NO.1]
- to combination meter terminals 40 and 42.

Ground is supplied

- to combination meter terminals 20 and 33
- through body grounds M24 and M114, and
- to seat belt buckle switch terminal 15A (with automatic drive positioner) or 14 (without automatic drive positioner)
- through body grounds B17 and B57, and
- to brake fluid level switch terminal 2 and
- to washer level switch terminal 2
- through body grounds E42 and E62.

AIR BAG WARNING LAMP

During probe out or when an air bag malfunction occurs, the ground path is interrupted

- from the air bag diagnosis sensor unit terminal 15
- to combination meter terminal 5.

Ground is supplied

- to combination meter terminal 45
- through body grounds M24 and M114.

When power and ground are supplied, the air bag warning lamp (LEDs) illuminates.
For further information, refer to SRS-8, "TROUBLE DIAGNOSIS" .

DOOR WARNING LAMP

Door waning lamp is controlled by BCM.
When one of the doors is opened, ground is supplied to the BCM terminals 33, 37, 142 and 143.
And then ground is supplied

- to combination meter terminal 3
- from BCM terminal 111.

When power and ground are supplied, the door warning lamp illuminates.

LOW OIL PRESSURE WARNING LAMP

Low oil pressure causes oil pressure switch terminal 1 to provide ground to combination meter terminal 63.
When power and ground are supplied, the low oil pressure warning lamp illuminates.

CHARGE WARNING LAMP

During prove out or when a alternator malfunction occurs, ground is supplied

- to combination meter terminal 64
- from alternator terminal 3.

When power and ground are supplied, the charge warning lamp and brake lamp illuminate.

LOW WASHER LEVEL WARNING LAMP

When the washer fluid level is low, ground is supplied

- to combination meter terminal 16
- from washer level switch terminal 1.

When power and ground are supplied, the signal is sent

- from combination meter terminals 56 and 57

- through AV and NAVI control unit terminals 32 and 33 or AV control unit terminals 34 and 35
- to display.

Then warning lamp message appears display.

A/T CHECK WARNING LAMP

When an A/T system malfunction occurs, signal sent

- to combination meter terminals 34 and 35
- from TCM (transmission control module) with CAN communication line.

When signal is received, the AT oil temp warning lamp blinks or illuminates.
For further information, refer to AT-242, "A/T CHECK Indicator Lamp does not come on" .

LOW FUEL LEVEL WARNING LAMP

The amount of fuel in the fuel tank is determined by the fuel level sensor in the fuel tank. Fuel level signal is sent

- from fuel level sensor unit terminal 5
- to combination meter terminal 30
- through fuel level sensor unit terminal 6
- to combination meter terminal 31.

The fuel level sensor will illuminate the low fuel level warning lamp when the fuel level is low.
When power and ground are supplied, the low fuel level warning lamp illuminates.

ABS WARNING LAMP

When an ABS malfunction occurs, ground is supplied

- to combination meter terminal 6
- from VDC/TCS/ABS control unit terminal 30.

When power and ground is supplied, the ABS warning lamp illuminates.
For further information, refer to BRC-40, "BASIC INSPECTION 3 ABS WARNING LAMP, VDC OFF LAMP, SLIP LAMP INSPECTION" .

VDC OFF WARNING LAMP

When VDC off switch is in OFF position, or an VDC/TCS/ABS malfunction occurs, ground is supplied

- to combination meter terminal 51
- from VDC/TCS/ABS control unit terminal 31.

When power and ground are supplied, the VDC off warning lamp illuminates.
For further information, refer to BRC-40, "BASIC INSPECTION 3 ABS WARNING LAMP, VDC OFF LAMP, SLIP LAMP INSPECTION" .

SLIP WARNING LAMP

When VDC is in operation, or a VDC malfunction occurs, ground is supplied

- to combination meter terminal 11
- from VDC/TCS/ABS control unit terminal 83.

When power and ground are supplied, the slip warning lamp illuminates.
For further information, refer to BRC-40, "BASIC INSPECTION 3 ABS WARNING LAMP, VDC OFF LAMP, SLIP LAMP INSPECTION" .

SEAT BELT WARNING LAMP

When the driver's seat belt is unfastened, ground is supplied

- to combination meter terminal 8
- from seat belt buckle switch terminal 41.

When power and ground are supplied, the seat belt warning lamp illuminates.

BRAKE WARNING LAMP

When the parking brake is applied, or the brake fluid level is low, ground is supplied

- to combination meter terminal 22
- from parking brake switch terminal 1, or
- to combination meter terminal 21

- brake fluid level switch terminal 1.

When power and ground are supplied, the brake warning lamp illuminates.

MALFUNCTION INDICATOR LAMP

During prove out or when an engine control malfunction occurs, ground is supplied

- to combination meter terminal 52
- from ECM terminal 35.

When power and ground are supplied, the malfunction indicator lamp illuminates.
For further information, refer to EC-410, "DTC P0650 MIL" .

LOW TIRE PRESSURE WARNING LAMP

When a low tire pressure warning control malfunction occurs, ground is supplied

- to combination meter terminal 7
- from low tire pressure warning control unit terminal 3.

When power and ground are supplied, the tire pressure warning lamp illuminates.
For further information, refer to WT-23, "TROUBLE DIAGNOSIS FOR SYMPTOMS" .

ASCD WARNING LAMP

When an ASCD malfunction occurs, ground is supplied

- to combination meter terminal 61
- from ASCD control unit terminal 18.

When power and ground are supplied, the ASCD warning lamp illuminates.

ICC SYSTEM WARNING LAMP

When an ICC system malfunction occurs, ground is supplied

- to combination meter terminal 53
- from ICC unit terminal 25.

When power and ground are supplied, the ICC system warning lamp illuminates.

WARNING MESSAGE ON DISPLAY

When a warning lamp illuminates or flushes, signal is sent

- from combination meter terminals 56 and 57
- through AV and NAVI control unit terminals 32 and 33 or AV control unit terminals 34 and 35
- to display.

Then warning message appears on display.

Schematic

AKS002ID

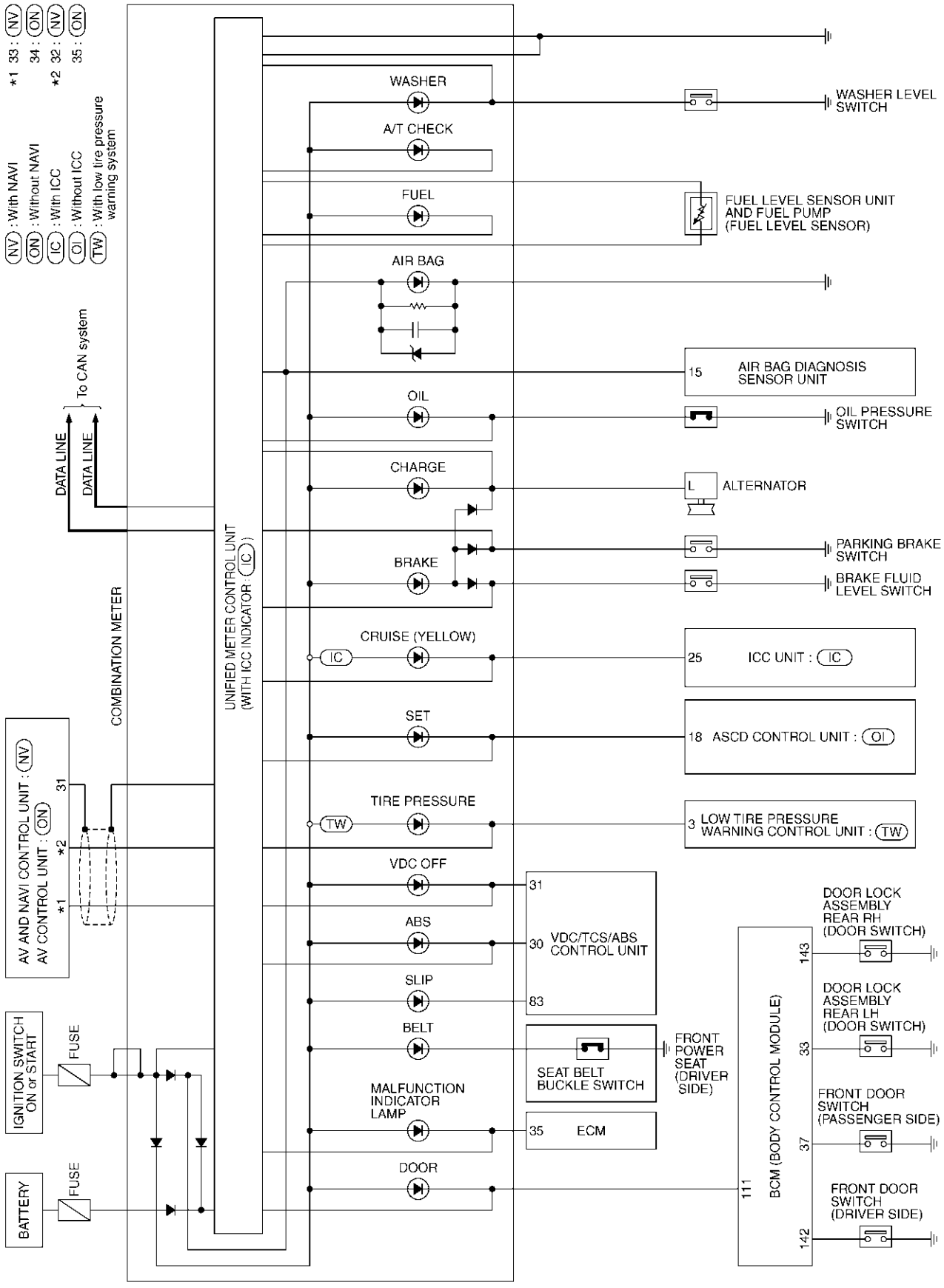

TKWA0583E

Wiring Diagram — WARN —

AKS002IE

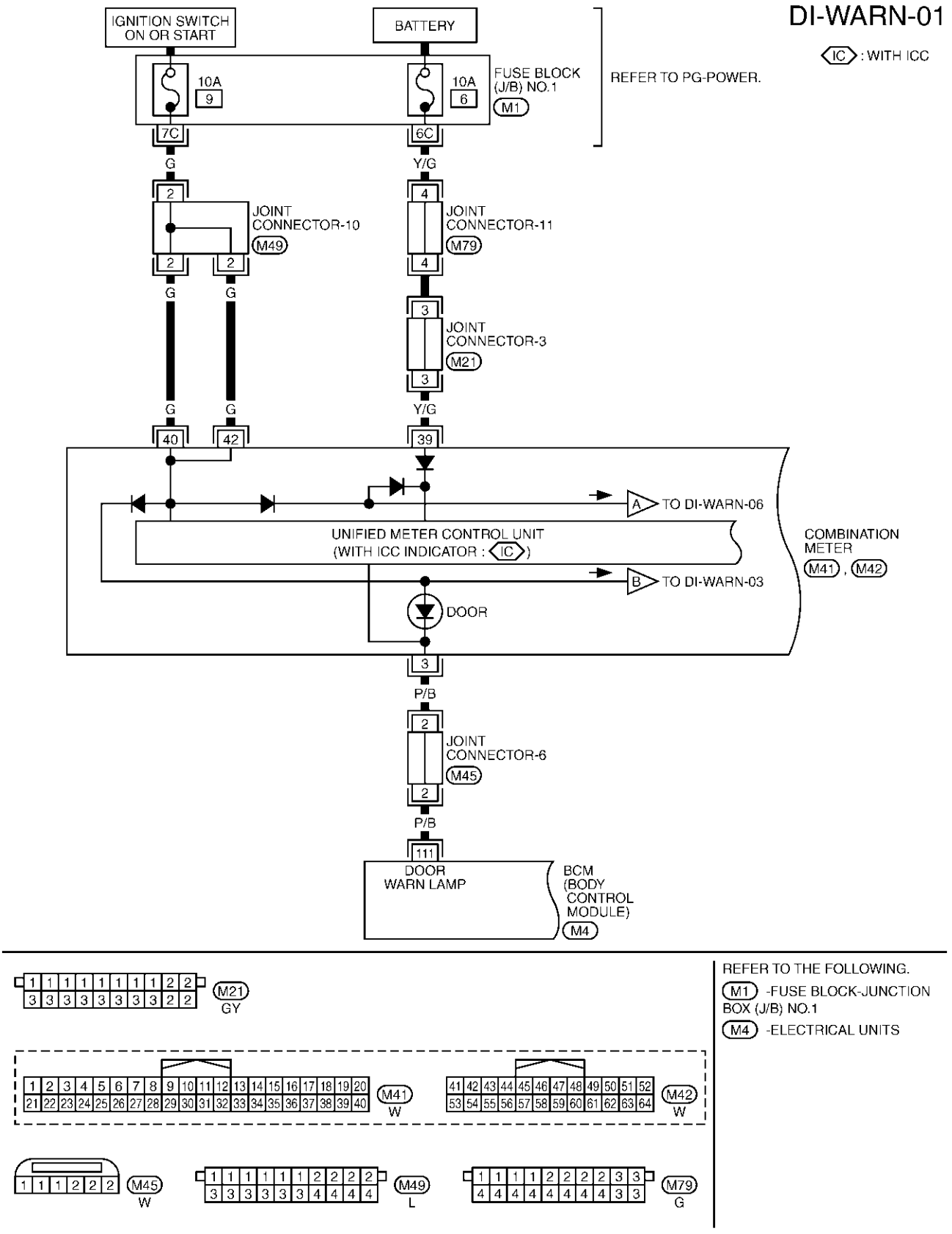

DI-WARN-02

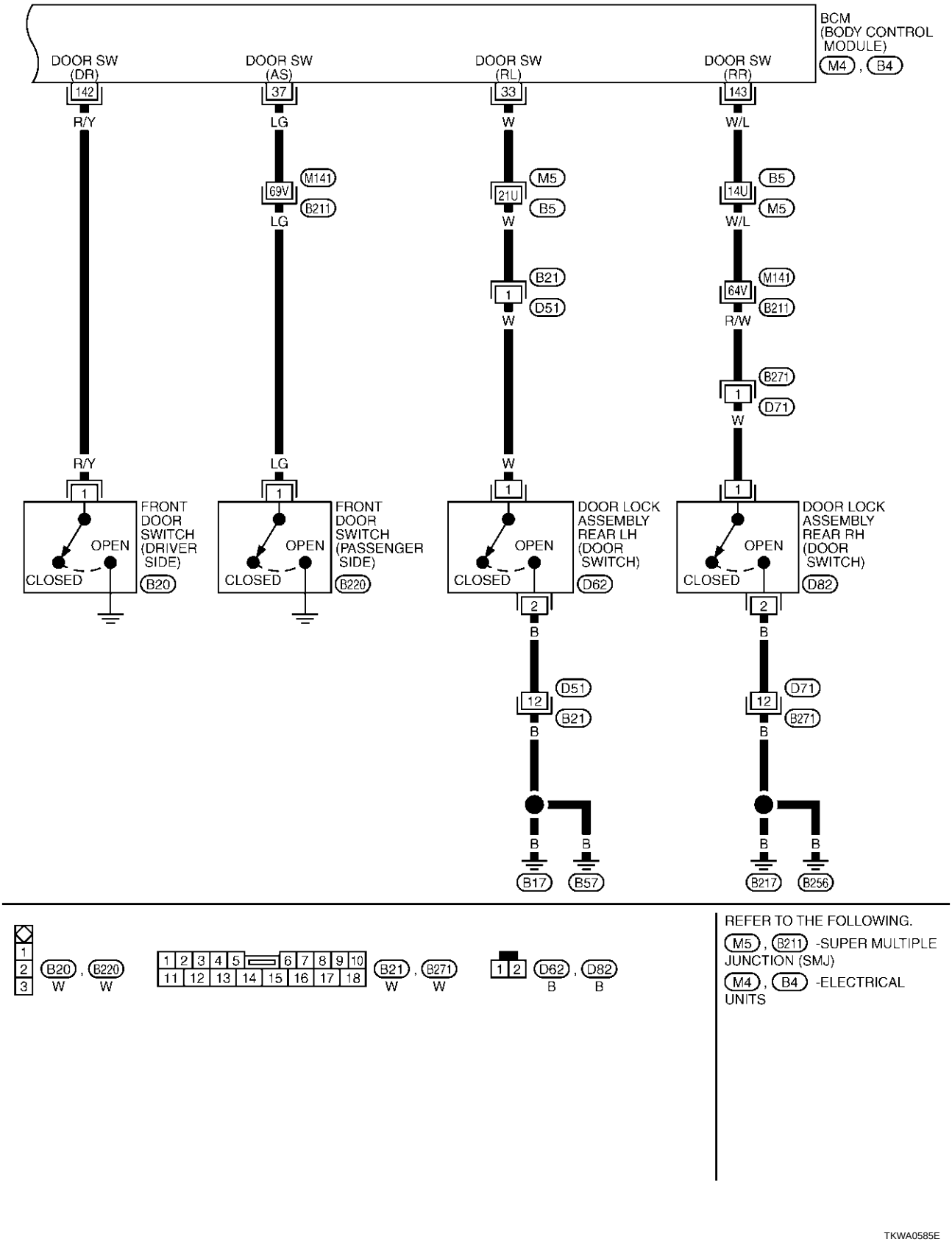

TKWA0585E

DI-WARN-03

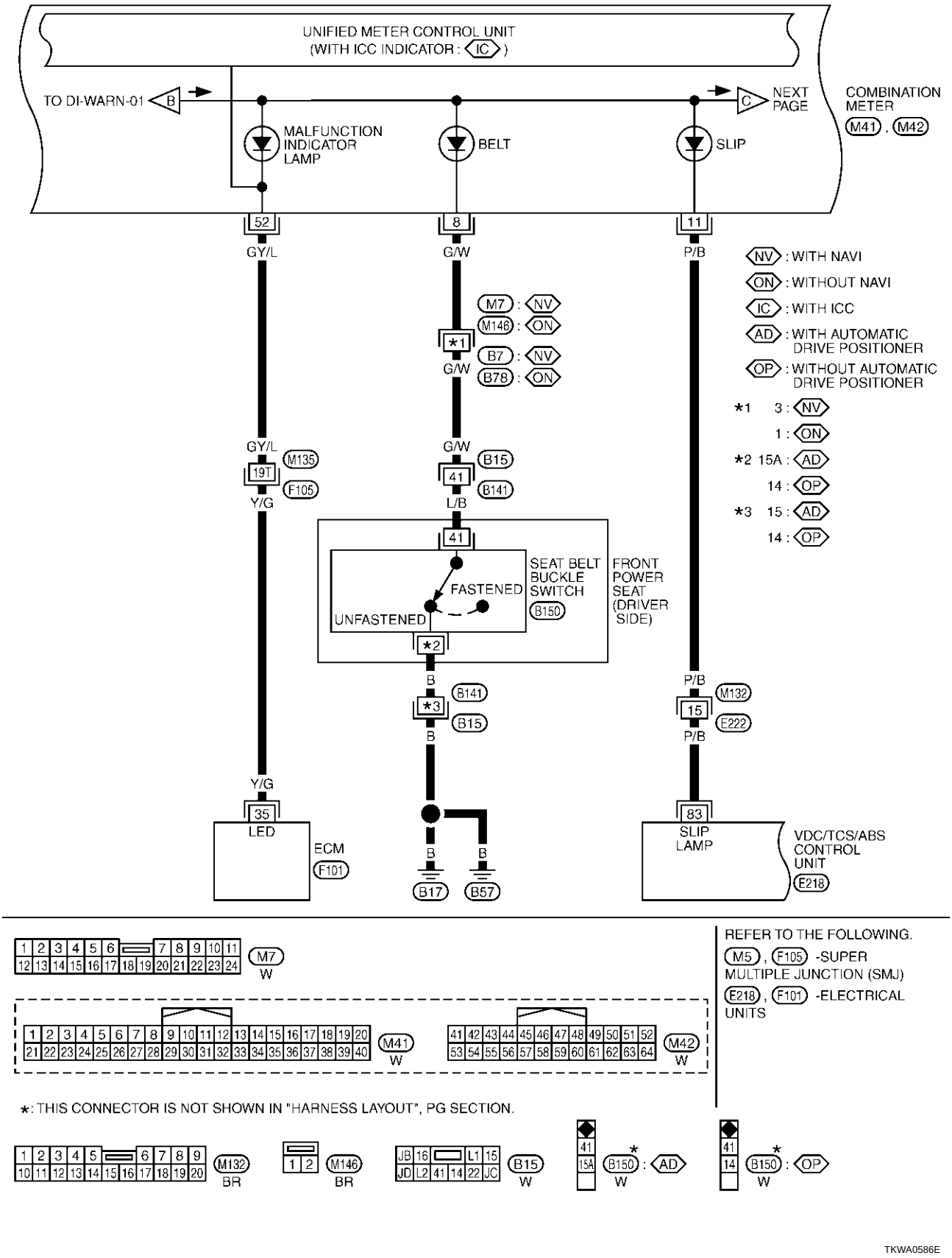
UNIFIED METER CONTROL UNIT
(WITH ICC INDICATOR : IC)
TO DI-WARN-01 B
C NEXT PAGE
COMBINATION METER
M41 , M42
MALFUNCTION INDICATOR LAMP
BELT
SLIP
52
8
11
GY/L
G/W
P/B
NV : WITH NAVI
ON : WITHOUT NAVI
IC : WITH ICC
AD : WITH AUTOMATIC DRIVE POSITIONER
OP : WITHOUT AUTOMATIC DRIVE POSITIONER
*1 3 : NV
1 : ON
*2 15A : AD
14 : OP
*3 15 : AD
14 : OP
M7 : NV
M146 : ON
*1
B7 : NV
B78 : ON
G/W
GY/L
M135
19T
F105
Y/G
G/W
B15
41
B141
L/B
41
SEAT BELT BUCKLE SWITCH
B150
FASTENED
UNFASTENED
FRONT POWER SEAT (DRIVER SIDE)
*2
B
B141
*3
B15
B
P/B
M132
15
E222
P/B
Y/G
35
LED
ECM
F101
B
B
B17
B57
83
SLIP LAMP
VDC/TCS/ABS CONTROL UNIT
E218
M7
W
M41
W
M42
W
REFER TO THE FOLLOWING.
M5 , F105 -SUPER MULTIPLE JUNCTION (SMJ)
E218 , F101 -ELECTRICAL UNITS
*: THIS CONNECTOR IS NOT SHOWN IN "HARNESS LAYOUT", PG SECTION.
M132
BR
M146
BR
B15
W
41
15A
B150
W
: AD
41
14
B150
W
: OP
TKWA0586E

DI-WARN-04

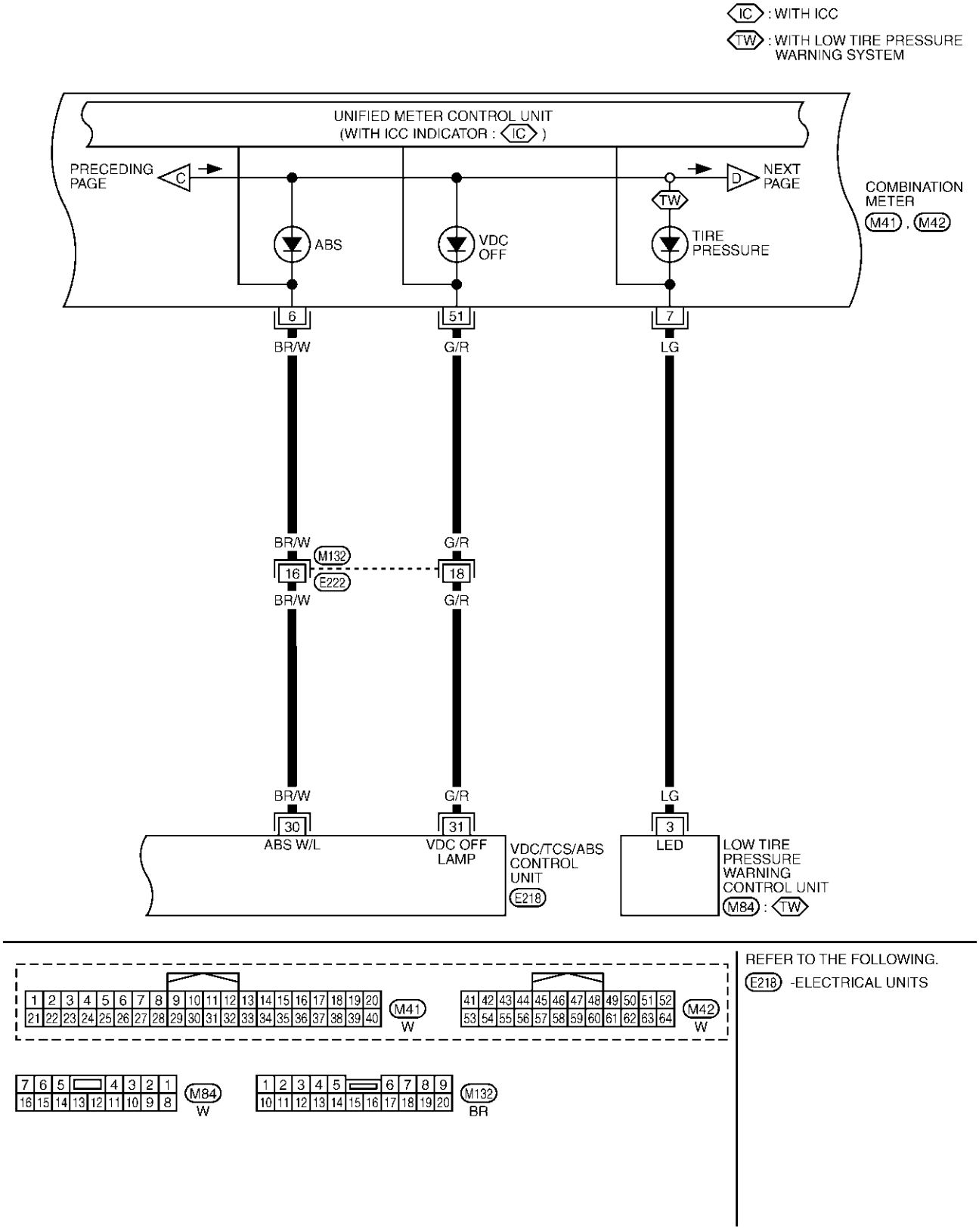

TKWA0587E

DI-WARN-05

IC : WITH ICC
OI : WITHOUT ICC

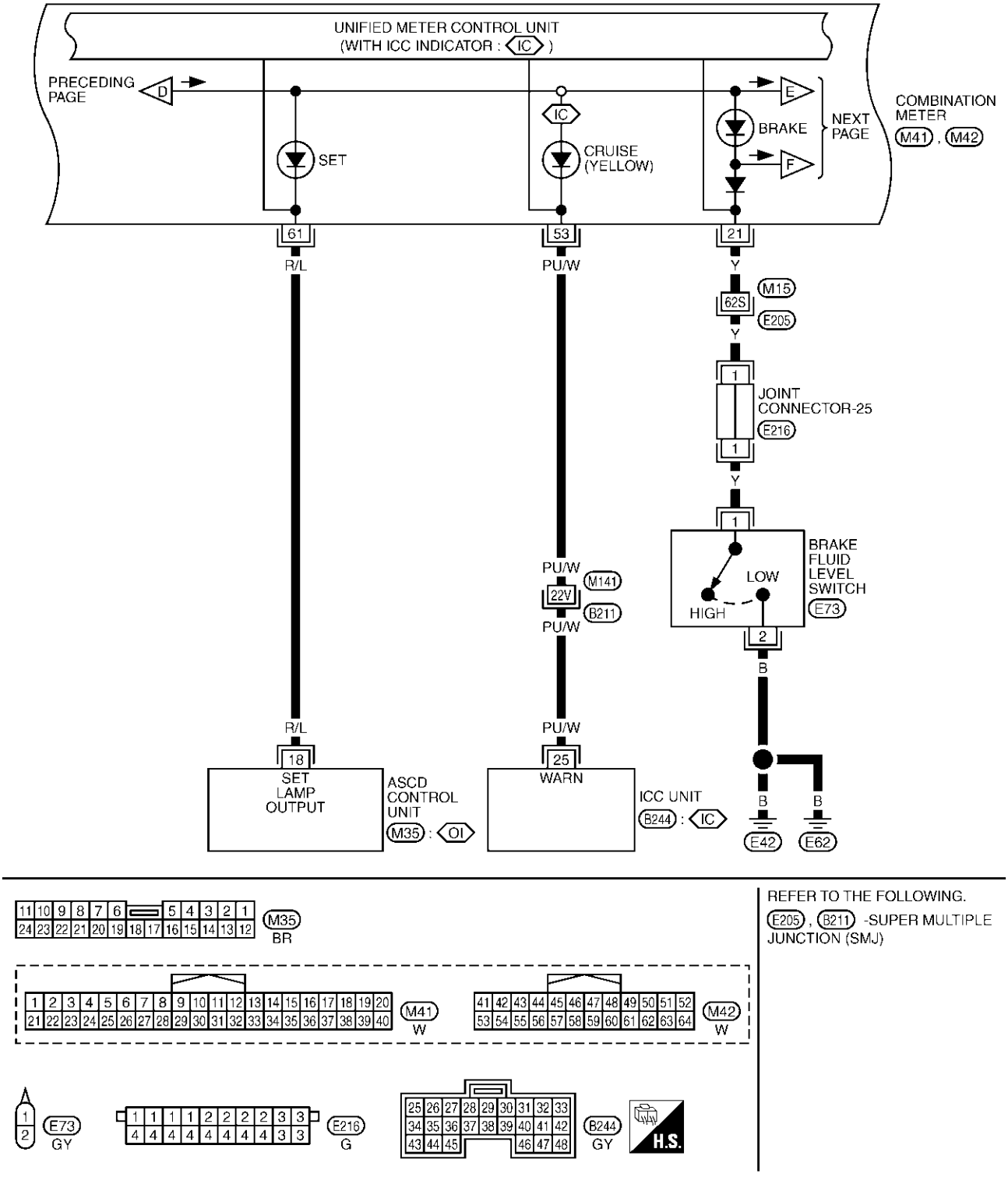

TKWA0588E

DI-WARN-06

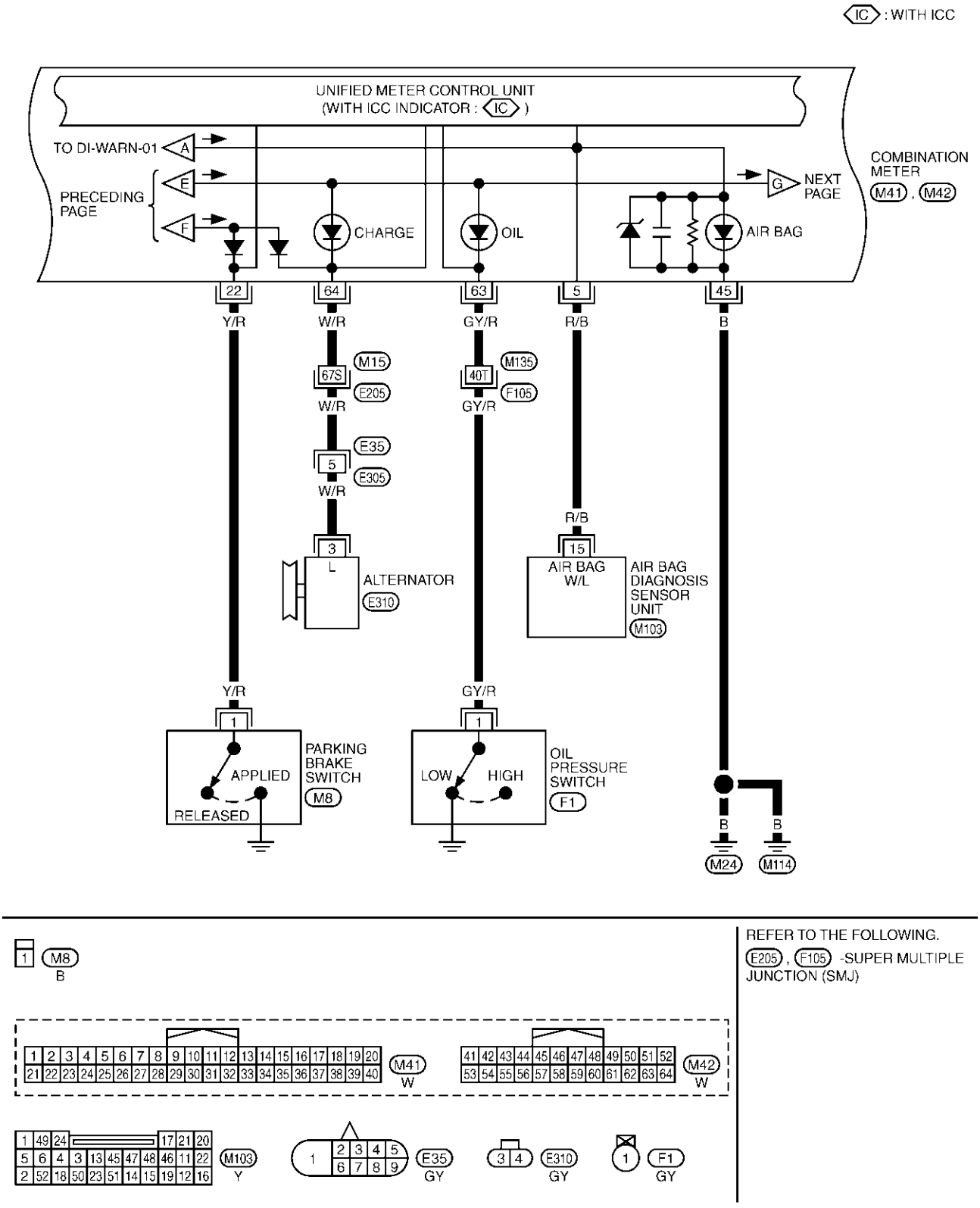

TKWA0589E

DI-WARN-07

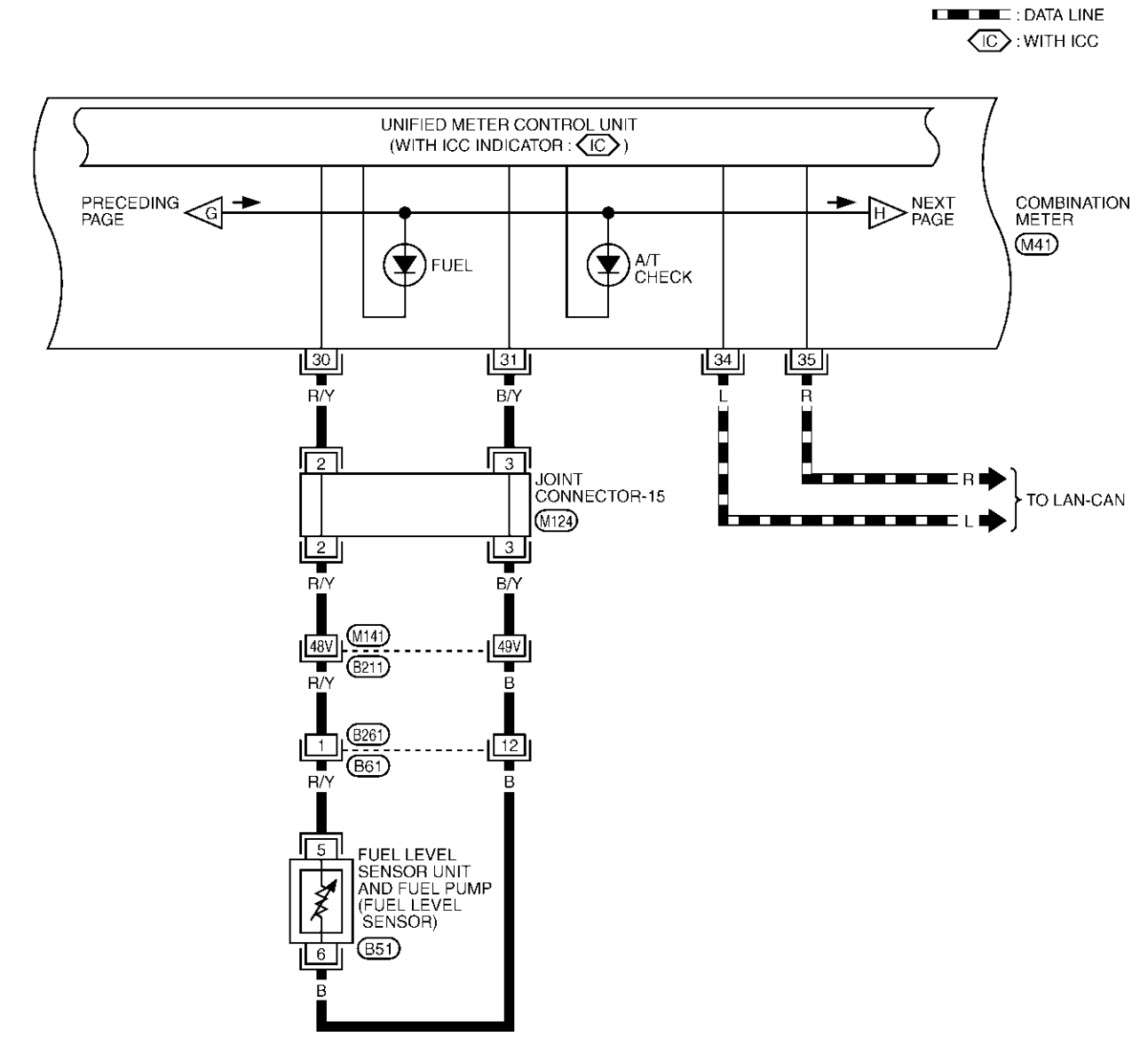

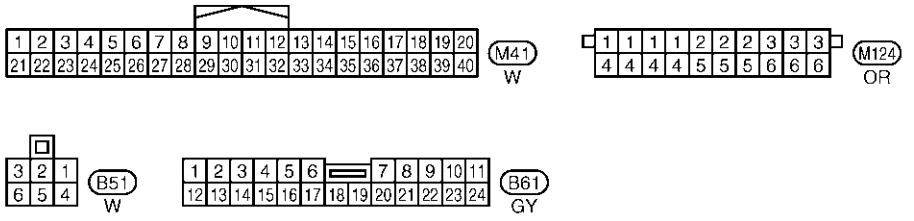

REFER TO THE FOLLOWING.

B211 -SUPER MULTIPLE JUNCTION (SMJ)

TKWA0590E

DI-WARN-08

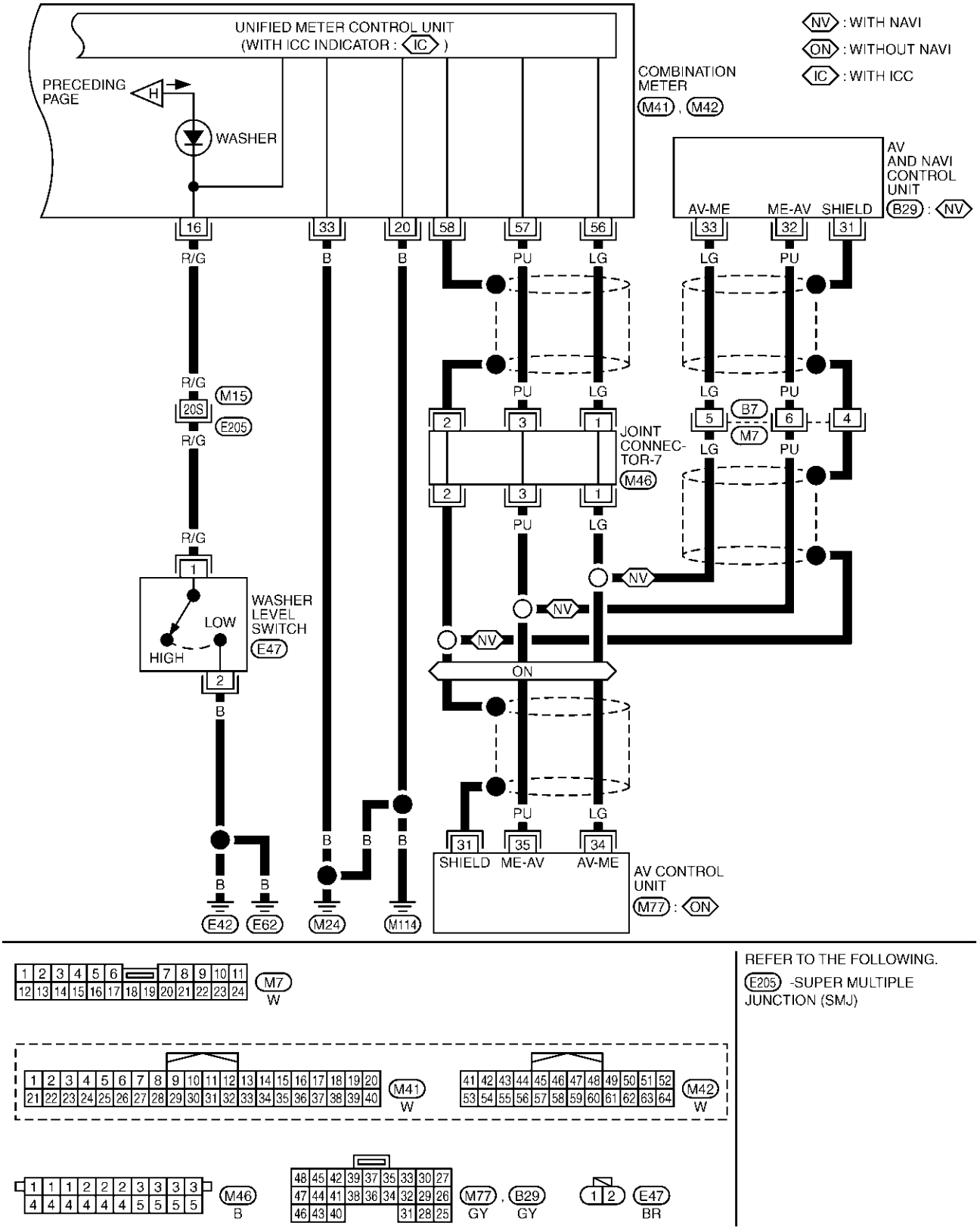

REFER TO THE FOLLOWING.
E205 -SUPER MULTIPLE JUNCTION (SMJ)

TKWA0591E

Terminals and Reference Value for BCM

AKS002IF

Terminal No.	Wire color	Item	Condition			Reference value
			Ignition switch	Operation or condition		
33	W	Door lock assembly rear LH (door switch)	OFF	ON (open)		Approx. 0
				OFF (closed)		Approx. 12
37	LG	Front door switch (passenger side)	OFF	ON (open)		Approx. 0
				OFF (closed)		Approx. 12
111	P/B	Door warning lamp	OFF	Door switch	ON (open)	Approx. 0
					OFF (closed)	Approx. 12
142	R/Y	Front door switch (driver side)	OFF	ON (open)		Approx. 0
				OFF (closed)		Approx. 12
143	W/L	Door lock assembly rear RH (door switch)	OFF	ON (open)		Approx. 0
				OFF (closed)		Approx. 12

Work Flow

AKS002IG

1. Check the symptom and customer's requests.
2. Understand the outline of system. Refer to DI-30, "System Description" .
3. Perform the preliminary inspection. Refer to DI-60, "Preliminary Inspection" .
4. Referring to Trouble diagnosis chart, repair or replace the cause of the incident. Refer to DI-46, "Trouble Diagnosis for Door Warning Lamp" .
5. Does warning chime system operate normally? If it operates normally, go to step 6. If not, go to step 4.
6. Inspection end.

Preliminary Inspection

AKS002IH

Perform preliminary check, refer to DI-60, "Preliminary Inspection" .

CONSULT-II Function

AKS002II

CONSULT-II executes the following functions by combining data reception and command transmission via the communication line from BCM. IVMS communication inspection, work support (only function setting of seats and steering wheel), self-diagnosis, data monitor, and active test display.

DIAGNOSTIC ITEMS DESCRIPTION

IVMS diagnosis position	Diagnosis mode	Description
DOOR OPEN WARNING	Data monitor	The input data to the BCM control unit is displayed in real time.
	Active test	Operation of electrical loads can be checked by sending driving signal to them.
BCM PART NUMBER		Displays BCM part No.

CONSULT-II BASIC OPERATION PROCEDURE

1. With the ignition switch OFF, connect “CONSULT-II” and “CONSULT-II CONVERTER” to the data link connector, and turn the ignition switch ON.

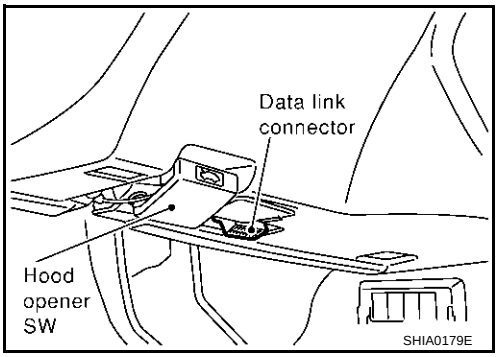

2. Touch “START (NISSAN BASED VHCL)”.

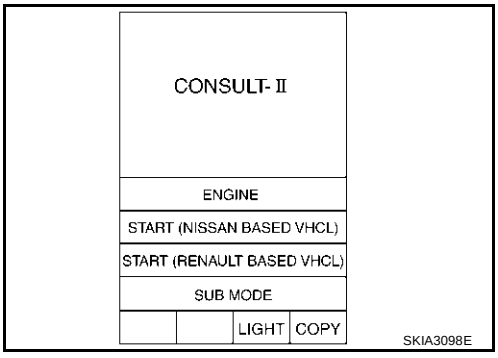

3. Touch “IVMS” on “SELECT SYSTEM” screen.
   If “IVMS” is not indicated, go to GI-38, "CONSULT-II Data Link Connector (DLC) Circuit" .

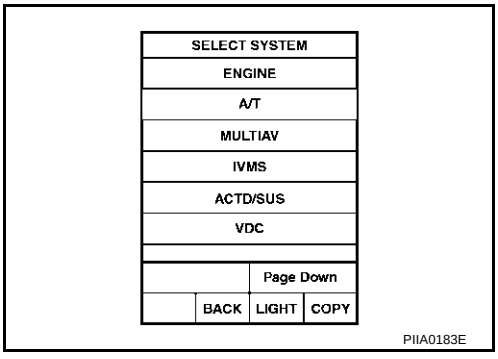

4. Check the model specification, touch either “WITH SUNROOF” or “WITHOUT SUNROOF”.
5. Touch “OK”. If the selection is wrong, touch “CANCEL”.

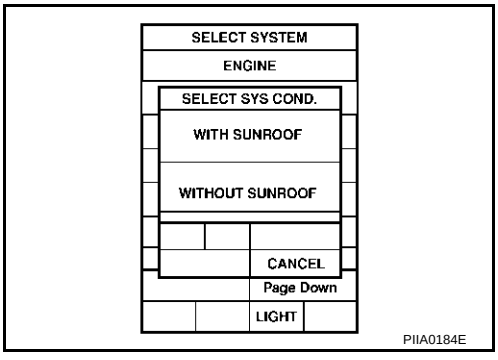

6. Select the desired part to be diagnosed on the “SELECT TEST ITEM” screen.

DATA MONITOR

Operation Procedure

1. Touch “DOOR OPEN WARNING” on “SELECT TEST ITEM” screen.
2. Touch “DATA MONITOR” on “SELECT DIAG MODE” screen.
3. Touch “MAIN SIGNALS” or “SELECTION FROM MENU” on “DATA MONITOR” screen.

MAIN SIGNALS	Monitors the main items.
SELECTION FROM MENU	Selects and monitors the items.

4. Touch “START”.
5. If “SELECTION FROM MENU” is selected, touch the desired monitor item. If “MAIN SIGNALS” is selected, the main item required to control is monitored.
6. During monitoring, touching “COPY” can start recording the monitor item status.

Data Monitor Item

Monitored item	Description
IGN ON SW	Indicates [ON/OFF] condition of ignition switch.
DOOR SW-DR	Indicates [ON/OFF] condition of front door switch (driver side).
DOOR SW-AS	Indicates [ON/OFF] condition of front door switch (passenger side).
DOOR SW-RL	Indicates [ON/OFF] condition of door lock assembly rear LH (door switch).
DOOR SW-RR	Indicates [ON/OFF] condition of door lock assembly rear RH (door switch).

ACTIVE TEST

Operation Procedure

1. Touch “DOOR OPEN WARNING” on “SELECT TEST ITEM” screen.
2. Touch “ACTIVE TEST” on “SELECT DIAG MODE” screen.
3. Touch the item to be tested, and check the operation.
4. During the operation check, touching “OFF” deactivates the operation.

Active Test Item

Test item.	Malfunction detecting condition
DR OPN WARN LAMP	This test is able to check door warning lamp operation. Door warning lamp indicate when touch “ON” on CONSULT-II screen.

On Board Diagnosis

AKS002IJ

ON BOARD DIAGNOSTIC RESULTS INDICATOR LAMP

- Map lamps and step lamps (all seats) act an the indicators for the on board diagnosis.

DIAGNOSIS ITEM

Diagnosis item	Description
Switch monitor	Monitoring conditions of switches connected to BCM.

SWITCH MONITOR

Perform the diagnosis on the switch system to each control unit.

How to Perform Switch Monitor

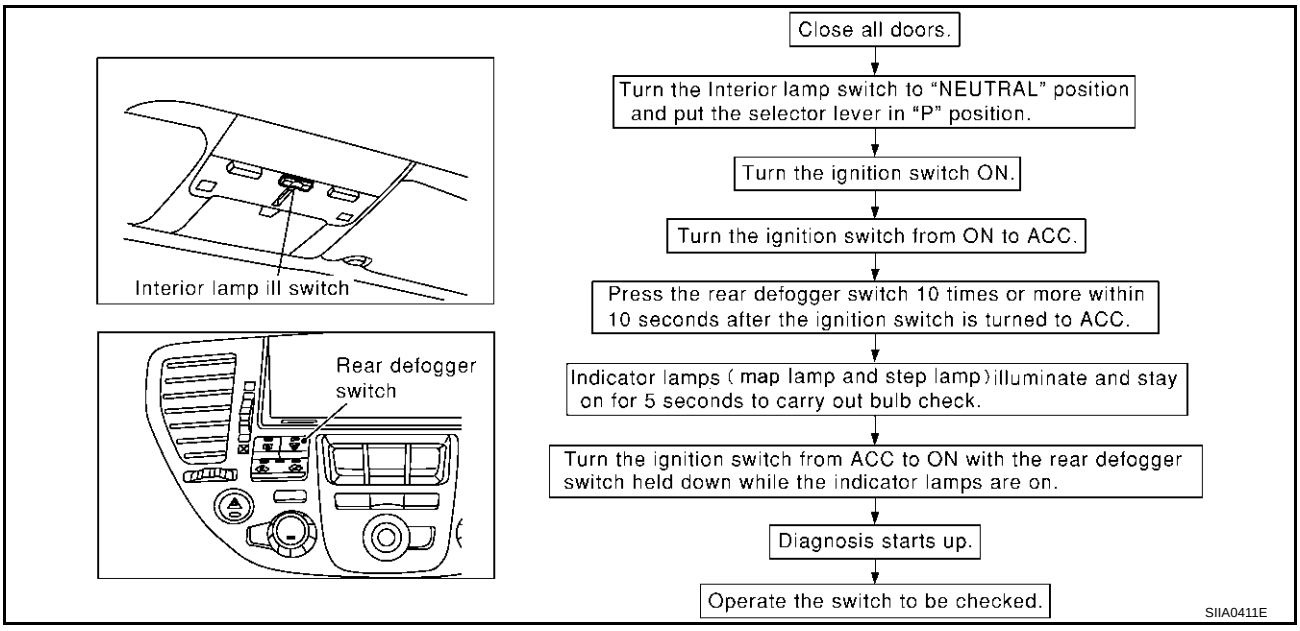

Description

In this mode, when BCM detects the input signal from a switch in IVMS as shown below, the detection is indicated by the map lamp and front step lamps with buzzer.

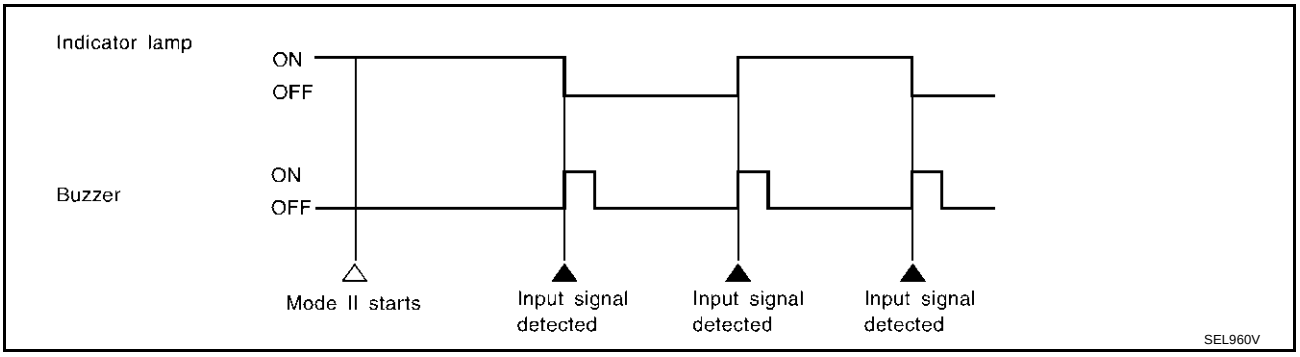

Switch Monitor Item

The status of the switch (except the ignition switch, interior lamp switch, and map lamp switch) as input to each control unit can be monitored.

BCM	Front door switch (driver side)
	Front door switch (passenger side)
	Door lock assembly rear LH (door switch)
	Door lock assembly rear RH (door switch)

Cancel of Switch Monitor

- Turn ignition switch OFF.
- Drive the vehicle at more than 7km/h (4MPH).

Trouble Diagnosis for Door Warning Lamp

AKS002IK

Symptom	Diagnostic procedure and repair order
Door warning lamp does not illuminate with any of doors are open.	● Check combination meter circuit. Refer to DI-46, "Inspection/Combination Meter Circuit" . ● Check front door switch. Refer to DI-46, "Inspection/Front Door Switch" . ● Check door lock assembly rear (door switch). Refer to DI-47, "Inspection/Rear Door Switch" . If the above systems work properly, replace the BCM.
Door warning lamp illuminates constantly.	

Inspection/Combination Meter Circuit

AKS002IL

1. CHECK DOOR WARNING LAMP INPUT SIGNAL

1. Disconnect BCM connector and combination meter connector.
2. Check the following.

– Continuity between BCM harness connector M4 terminal 111 (P/B) and combination meter harness connector M41 terminal 3 (P/B)

Continuity should exist

– Continuity between BCM harness connector M4 terminal 111 (P/B) and ground

Continuity should not exist

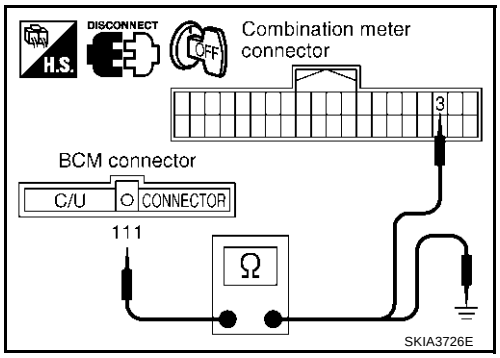

OK or NG

OK >> GO TO 2.
NG >> Repair harness or connector.

2. CHECK DOOR WARNING LAMP

1. Connect combination meter connector.
2. Turn ignition switch ON.
3. Check voltage between BCM harness connector M4 terminal 111 (P/B) and ground.

Battery voltage should exist.

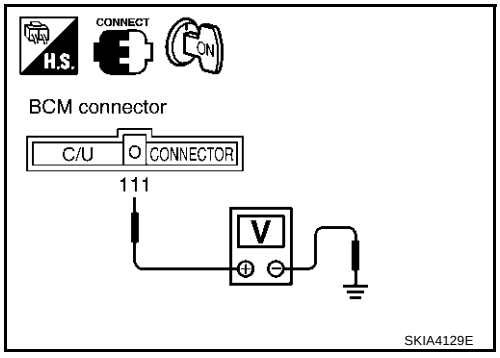

OK or NG

OK >> Combination meter is OK.
NG >> Replace combination meter.

Inspection/Front Door Switch

AKS002IM

1. CHECK FRONT DOOR SWITCH OPERATION

With CONSULT-II

See “DOOR SW” on DATA MONITOR in DATA MONITOR mode.

Without CONSULT-II

Check front door switches in Switch monitor mode. Refer to DI-44, "On Board Diagnosis" .

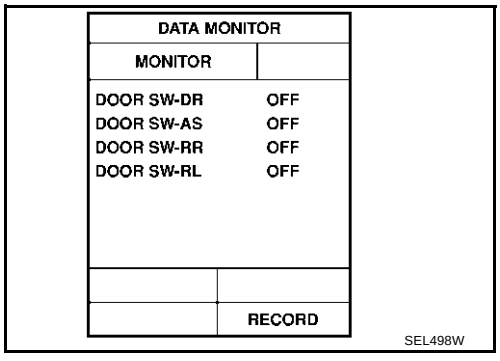

OK or NG

OK >> Front door switch is OK.
NG >> GO TO 2.

2. CHECK FRONT DOOR SWITCH OPEN OR SHORT CIRCUIT

1. Turn ignition switch OFF.
2. Disconnect BCM connector and front door switches connector.
3. Check the following.

– Continuity between BCM harness connector B4 terminal 142 (R/Y) and front door switch (driver side) harness connector B20 terminal 1 (R/Y)

Continuity should exist.

– Continuity between BCM harness connector M4 terminals 37 (LG) and front door switch (passenger side) harness connector B220 terminal 1 (LG)

Continuity should exist.

– Continuity between BCM harness connector M4, B4 terminals 37 (LG), 142 (R/Y) and ground

Continuity should not exist.

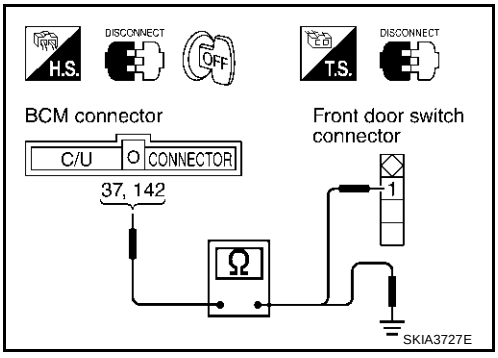

OK or NG

OK >> GO TO 3.
NG >> Repair harness or connector.

3. CHECK FRONT DOOR SWITCH (DRIVER SIDE OR PASSENGER SIDE)

Check continuity between front door switch and ground.

Terminal		Condition	Continuity
1	Ground	Pressed	No
		Released	Yes

OK or NG

OK >> Front door switch is OK.
NG >> Replace front door switch.

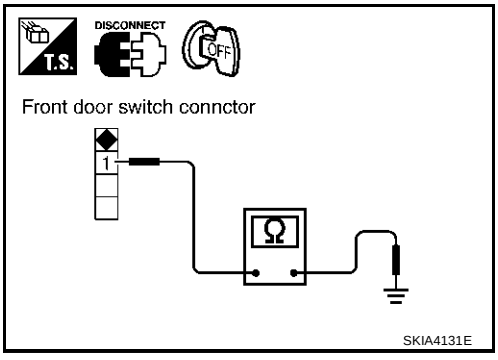

Inspection/Rear Door Switch

AKS002IN

1. CHECK REAR DOOR SWITCH OPERATION

With CONSULT-II

See “DOOR SW” in DATA MONITOR mode.

Without CONSULT-II

Check rear doors switches in Switch monitor mode. Refer to DI-44, "On Board Diagnosis" .

OK or NG

OK >> Door lock assembly rear (door switch) is OK.
NG >> GO TO 2.

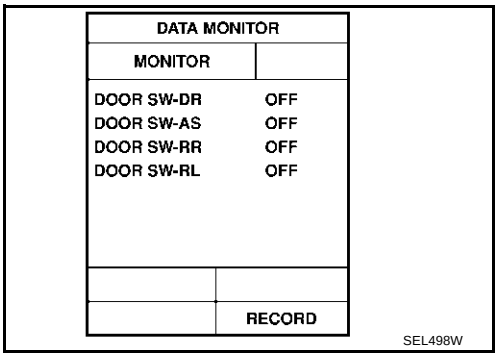

2. CHECK REAR DOOR SWITCH INPUT SIGNAL

1. Turn ignition switch OFF.
2. Disconnect BCM connector and door lock assembly rear (door switch) connector.
3. Check the following.

– Continuity between BCM harness connector B4, M4 terminals 143 (W/L), 33 (W) and Door lock assembly rear RH (door switch) harness connector D82 terminal 1 (W) or Door lock assembly rear LH (door switch) harness connector D62 terminal 1 (W)

Continuity should exist.

– Continuity between BCM harness connector M4, B4 terminal 33 (W), 143 (W/L) and ground

Continuity should not exist.

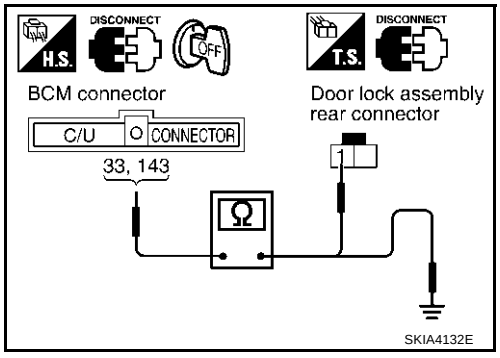

OK or NG

OK >> GO TO 3.
NG >> Repair harness or connector.

3. CHECK REAR DOOR SWITCH

Check continuity between door lock assembly rear (door switch) LH or RH harness connector D62 (LH), D82 (RH) terminal 2 and 1.

Terminal		Condition	Continuity
1	2	Pressed	No
		Released	Yes

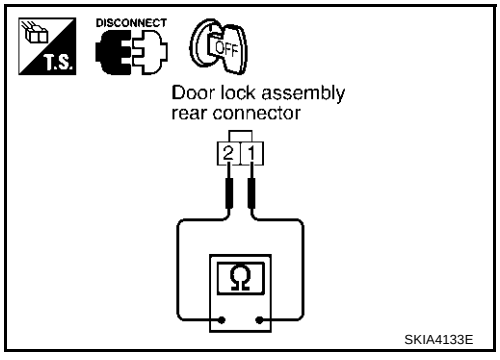

OK or NG

OK >> GO TO 4.
NG >> Replace door lock assembly rear (door switch).

4. CHECK REAR DOOR SWITCH GROUND CIRCUIT

Check continuity between door lock assembly rear (door switch) harness connector D62 or D82 terminal 2 (B) and ground.

Continuity should exist.

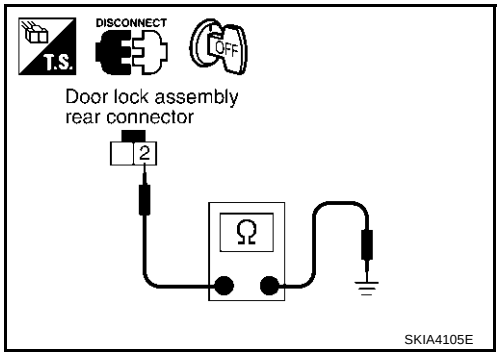

OK or NG

OK >> Door lock assembly rear (door switch) is OK.
NG >> Repair harness or connector.

Electrical Components Inspection

AKS002IO

OIL PRESSURE SWITCH

Check continuity between the oil pressure switch and ground.

Condition	Oil pressure kPa (kg/cm^2 , psi)	Continuity
Engine stopped	Less than 29 (0.3, 4)	Yes
Engine running	More than 29 (0.3, 4)	No

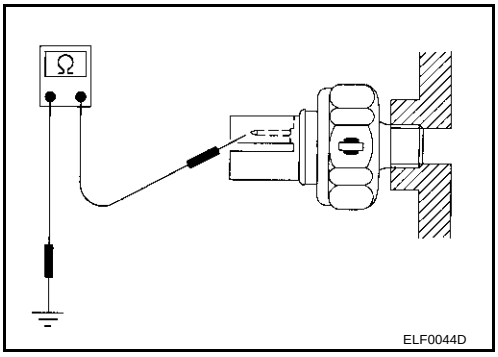

A/T INDICATOR

PFP:24814

Wiring Diagram — AT/IND —

AKS002IP

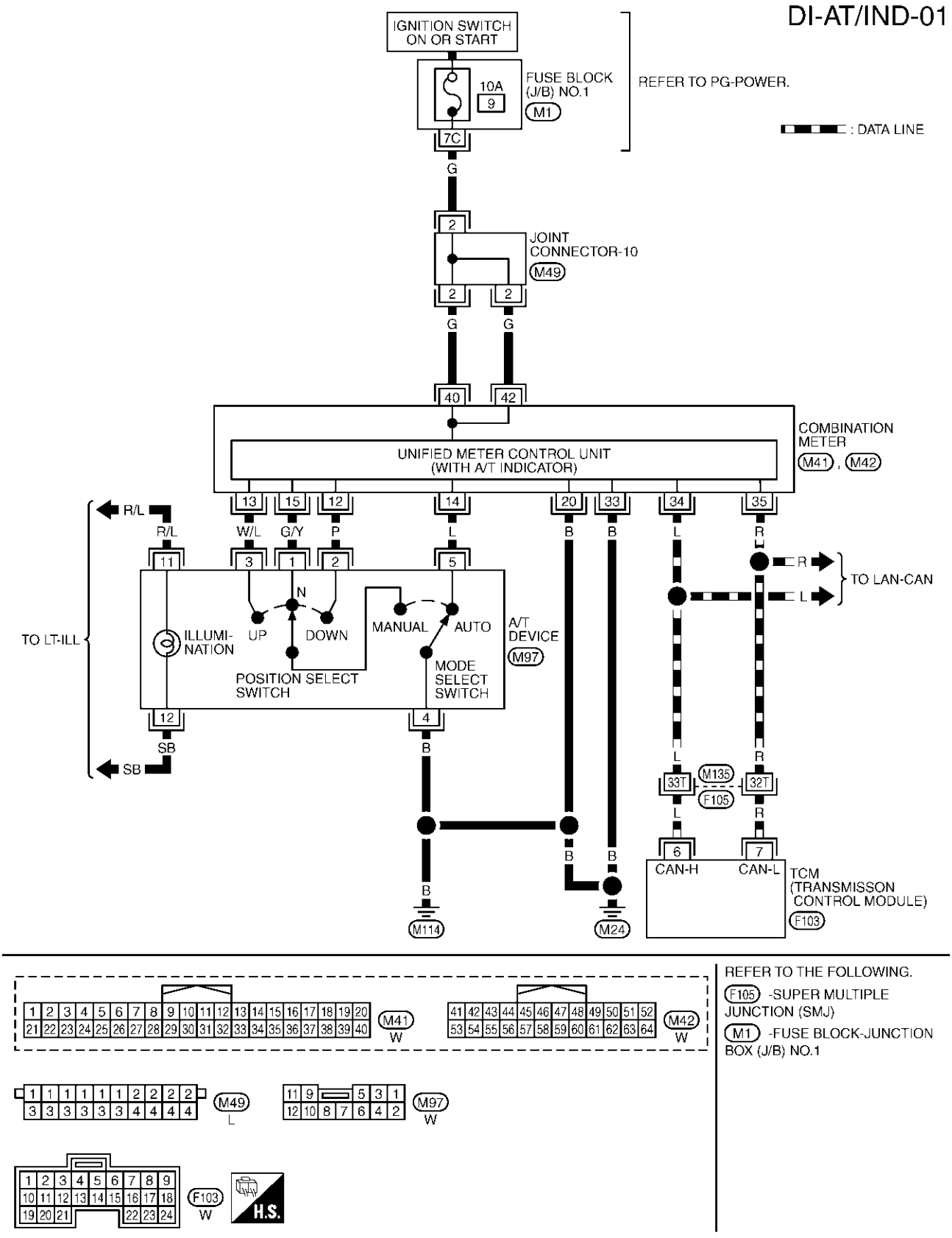

A/T Indicator Does Not Illuminate

AKS002IR

1. CHECK COMBINATION METER SELF-DIAGNOSIS

Perform combination meter self-diagnosis mode. Refer to DI-15, "Meter/Gauges Operation, Odo/Trip Meter, A/T Indicator and ICC System Display" .

If it check from combination meter trouble diagnosis, go to next step.

OK or NG

OK >> A/T indicator is OK
NG >> Replace combination meter.

2. CHECK TCM CONTROL UNIT SYSTEM

Perform TCM self-diagnosis. Refer to AT-87, "CONSULT-II" in AT section.

OK or NG

OK >> Replace combination meter.
NG >> Perform “Diagnosis Procedure” displayed self-diagnosis results.

WARNING CHIME

PFP:24814

System Description

AKS002IS

FUNCTION

Item	Description
Ignition key warning chime	Sounds warning chime when driver's door is opened with key in ignition key cylinder and ignition switch "OFF" or "ACC" position.
Light warning chime	Sounds warning chime when driver's door is opened with lighting switch in the 1st or 2nd position and ignition switch "OFF" or "ACC" position.
Seat belt warning chime	Sounds warning chime for about 6 seconds if ignition switch is turned "ON" when driver's seat belt is unfastened

Power is supplied at all times

- through 10A fuse [No. 3, located in the fuse block (J/B) NO. 1]
- to BCM terminal 105,
- through 10A fuse [No. 32, located in the fuse block (J/B) NO. 2]
- to key switch and key lock solenoid (key switch) terminal 3,
- through 10A fuse [No. 6, located in the fuse block (J/B) NO. 1]
- to headlamp battery saver control unit terminal 7 and
- to warning chime terminal 1, and
- through 15A fuse [No. 54, located in the fuse, fusible link and relay block (J/B)]
- to tail lamp relay terminals 2 and 6 [located in fuse, fusible link and relay block (J/B)].

With ignition switch in ON or START position, power is supplied

- through 10A fuse [No. 1, located in the fuse block (J/B) NO. 1]
- to BCM terminal 68.

Ground is supplied

- to BCM terminals 56 and 113
- through body grounds M24 and M114.

When a signal, or combination of signals, is received by the BCM, the warning chime will sound.

IGNITION KEY WARNING CHIME

With the key in the ignition key cylinder, power is supplied

- through key switch and key lock solenoid (key switch) terminal 4
- to BCM terminal 69,

When front door switch (driver side) is open, ground is supplied

- to BCM terminal 142
- through front door (driver side) switch terminal 1.

Front door switch (driver side) is case ground.
With ignition switch in OFF or ACC position, and the driver's door open, ground is supplied

- to warning chime terminal 3
- from BCM terminal 12.

The warning chime will sound.

LIGHT WARNING CHIME

When lighting switch is in the 1st or 2nd position, ground is supplied

- to tail lamp relay terminal 1
- through battery saver control unit terminals 6 and 14,
- to battery saver control unit terminals 5 and 13
- through combination switch terminal 11 and
- to combination switch terminal 5
- through body grounds M25 and M115.

then tail lamp relay is energied, power is supplied

- through tail lamp relay terminal 7 [located in fuse, fusible link and relay block (J/B)]
- to BCM terminal 3,

When front door switch (driver side) is open, ground is supplied

- to BCM terminal 142.
- through front door switch (driver side) terminal 1.

Front door switch (driver side) is case ground.
With ignition switch OFF or ACC position, driver's door open, and lighting switch in 1ST or 2ND position, ground is supplied

- to warning chime terminal 3
- from BCM terminal 12.

The warning chime will sound. [Except when head lamp battery saver control operates (for 45 seconds after ignition switch is turned to OFF or ACC position) and head-lamps do not illuminate.]

SEAT BELT WARNING CHIME

When seat belt buckle switch is unfastened, ground is supplied

- to BCM terminal 147
- through front power seat (seat belt buckle switch) terminals 15A (with automatic drive position) and 41or
- through front power seat (seat belt buckle switch) terminals 14 (without automatic drive positioner) and 41, and
- through body grounds B17 and B57.

With ignition switch turned ON and seat belt unfastened (seat belt switch ON), ground is supplied

- to warning chime terminal 3
- from BCM terminal 12.

warning chime will sound for approximately 6 seconds.

Component Parts and Harness Connector Location

AKS002IT

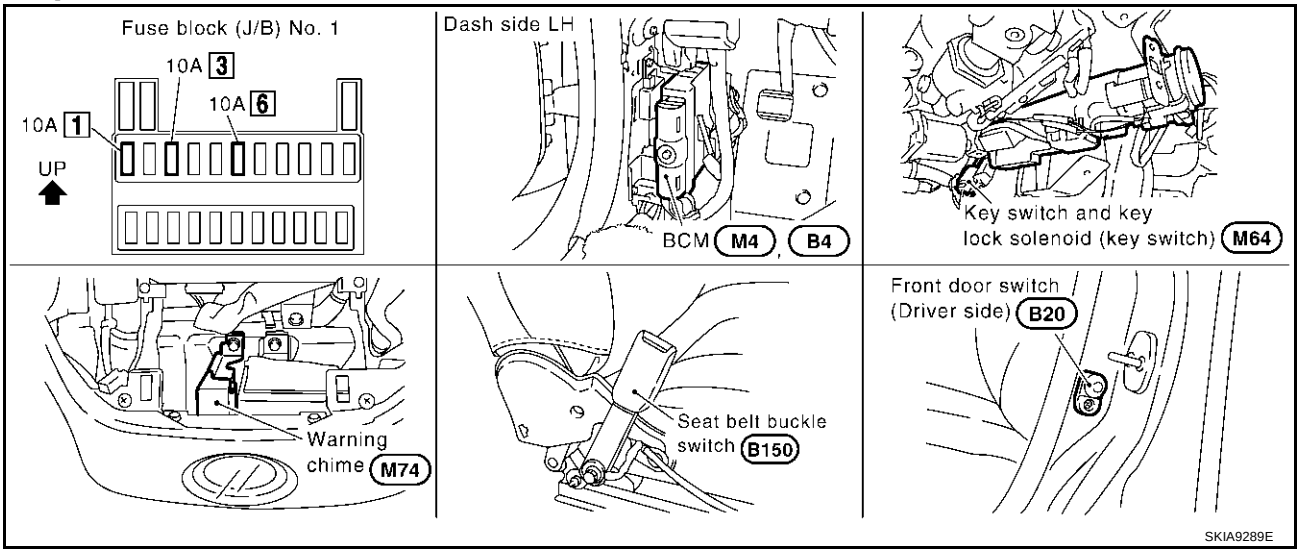

Major Component Parts and Function

AKS002IU

Components	Functions
BCM	It operates the warning chime intermittently by signals from the ignition switch, key detection switch, lighting switch, or front door switch (driver side) or seat belt buckle switch (driver side).
Warning chime	It generates intermittent sounds by signals from the BCM.

Schematic

AKS002IV

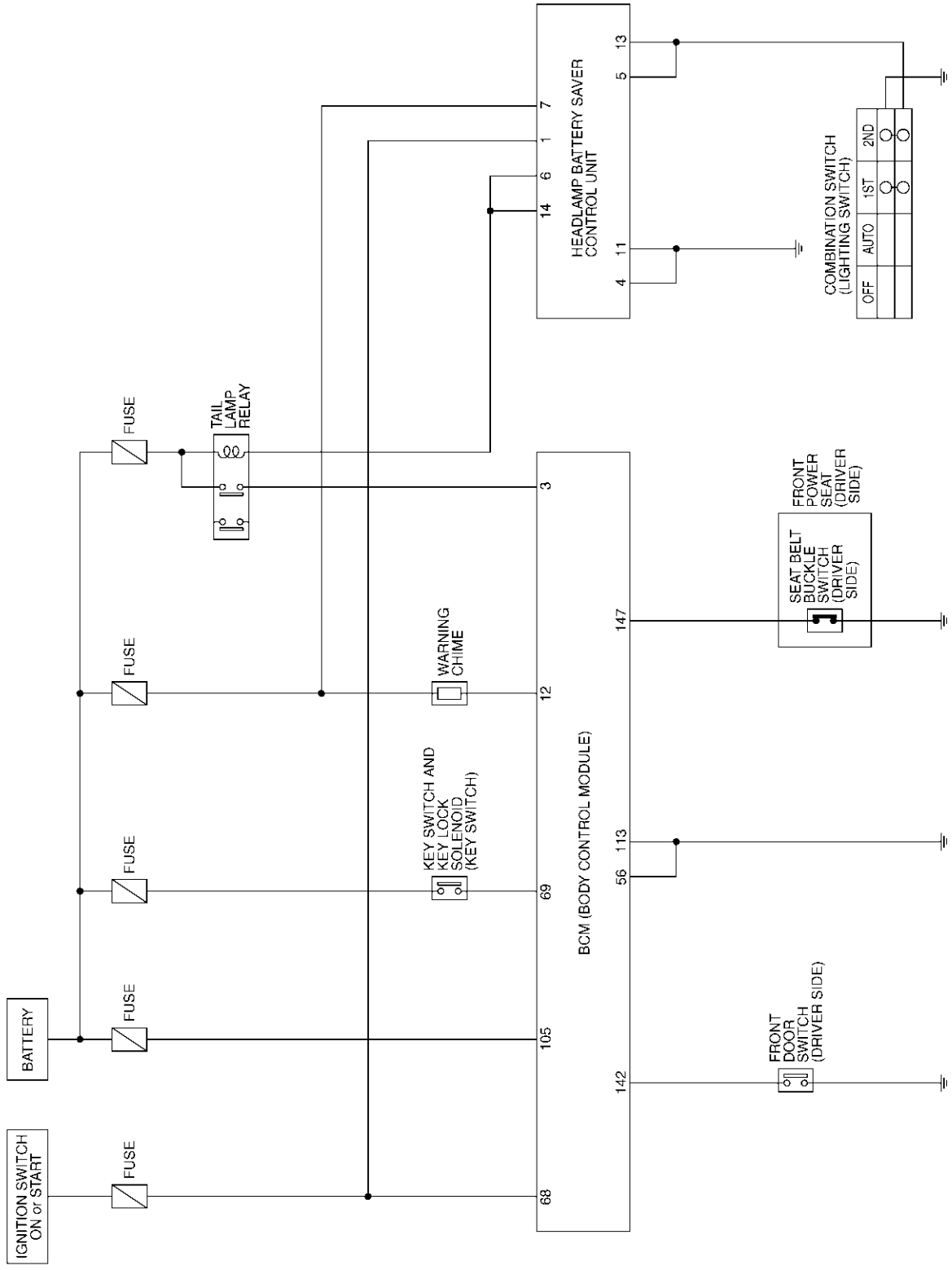

TKWA0593E

Wiring Diagram — CHIME —

AKS002IW

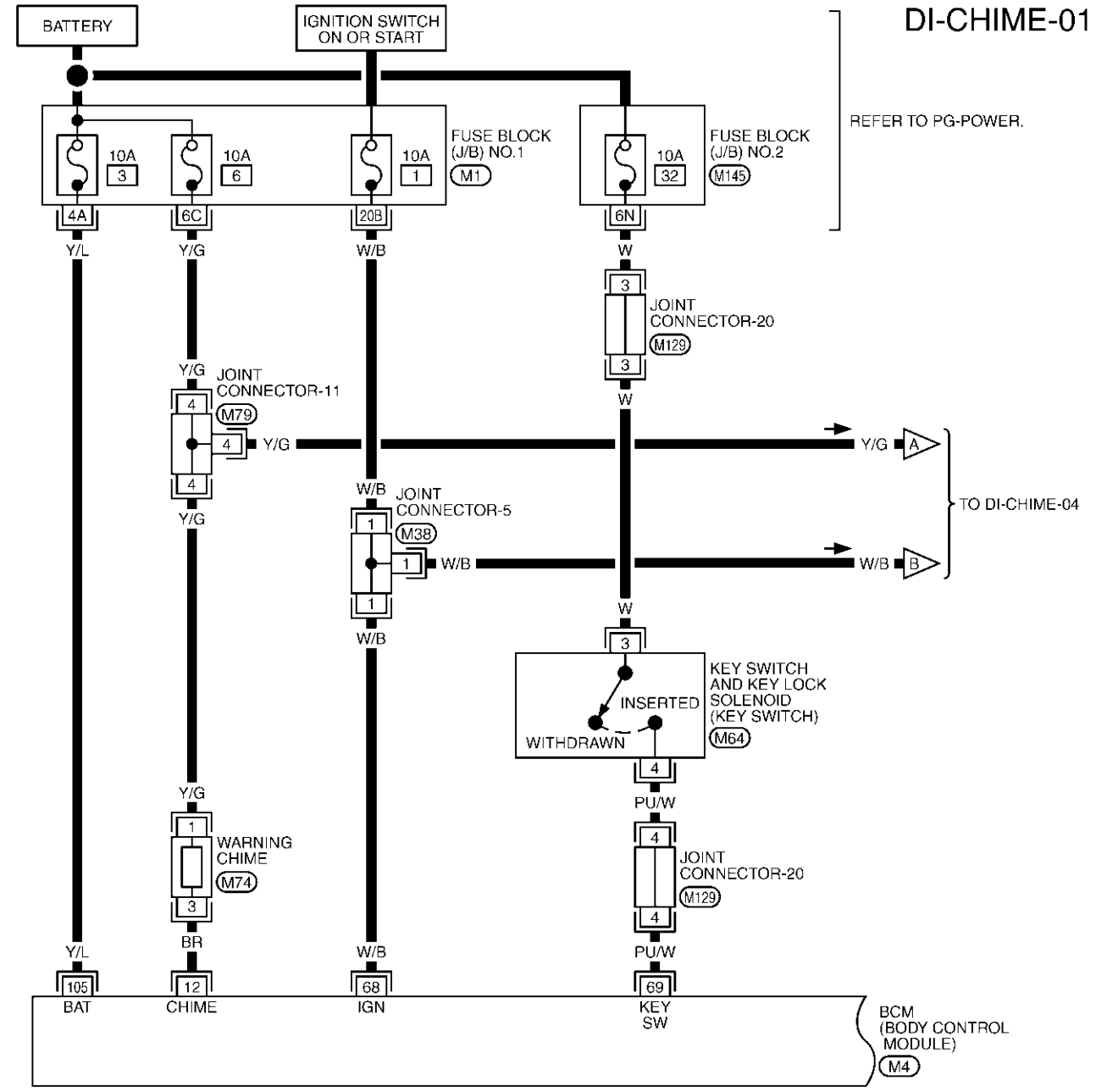

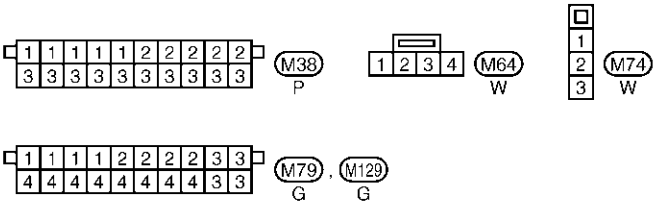

REFER TO THE FOLLOWING.

M1 -FUSE BLOCK-JUNCTION BOX (J/B) NO.1

M145 -FUSE BLOCK-JUNCTION BOX (J/B) NO.2

M4 -ELECTRICAL UNITS

TKWA0594E

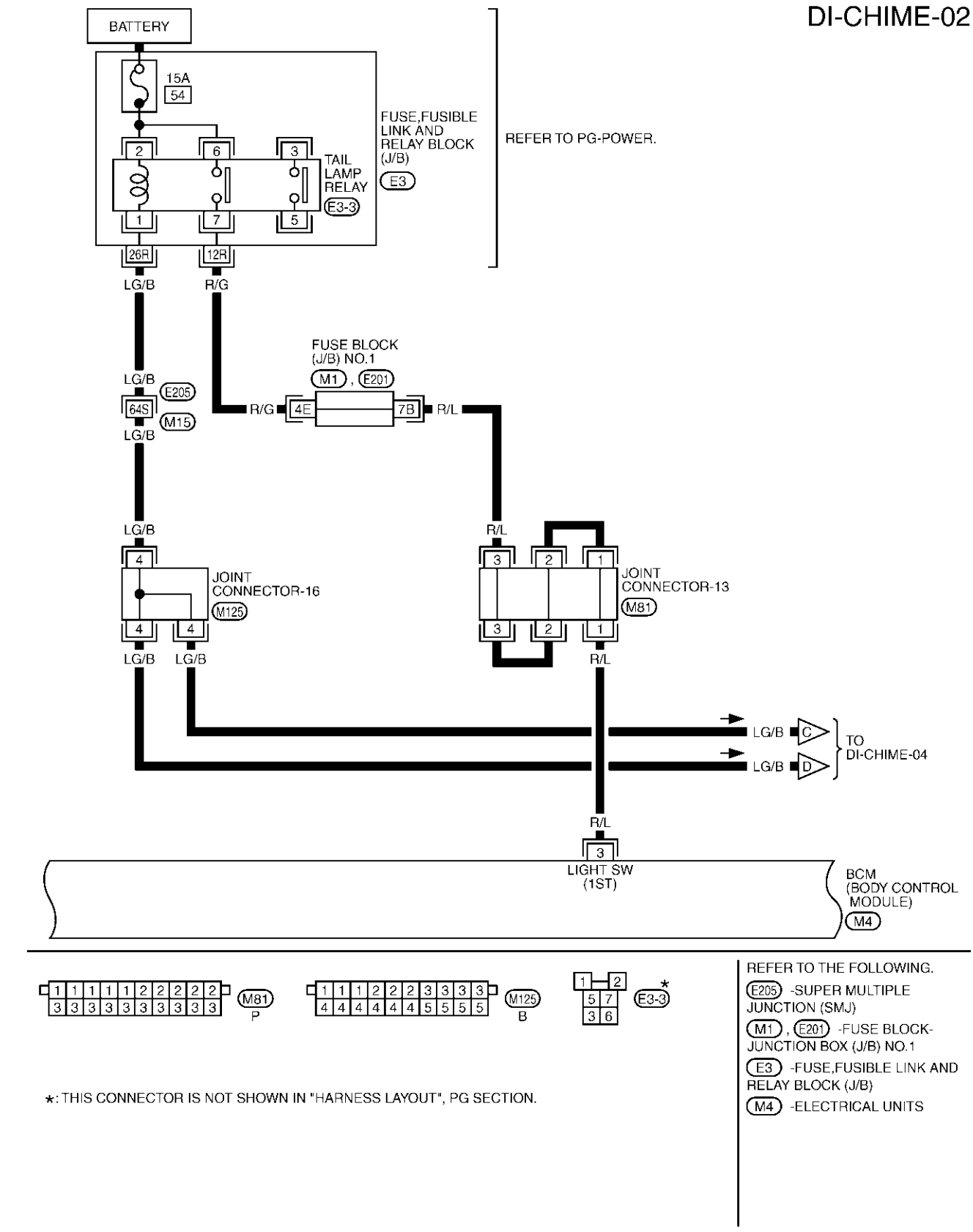
DI-CHIME-02
BATTERY
15A
54
FUSE,FUSIBLE LINK AND RELAY BLOCK (J/B)
E3
TAIL LAMP RELAY
E3-3
REFER TO PG-POWER.
26R
12R
LG/B
R/G
FUSE BLOCK (J/B) NO.1
M1 , E201
E205
64S
M15
4E
7B
R/L
JOINT CONNECTOR-16
M125
JOINT CONNECTOR-13
M81
TO DI-CHIME-04
LIGHT SW (1ST)
BCM (BODY CONTROL MODULE)
M4
M81
P
M125
B
E3-3
*: THIS CONNECTOR IS NOT SHOWN IN "HARNESS LAYOUT", PG SECTION.
REFER TO THE FOLLOWING.
E205 -SUPER MULTIPLE JUNCTION (SMJ)
M1 , E201 -FUSE BLOCK-JUNCTION BOX (J/B) NO.1
E3 -FUSE,FUSIBLE LINK AND RELAY BLOCK (J/B)
M4 -ELECTRICAL UNITS
TKWA0595E

DI-CHIME-03

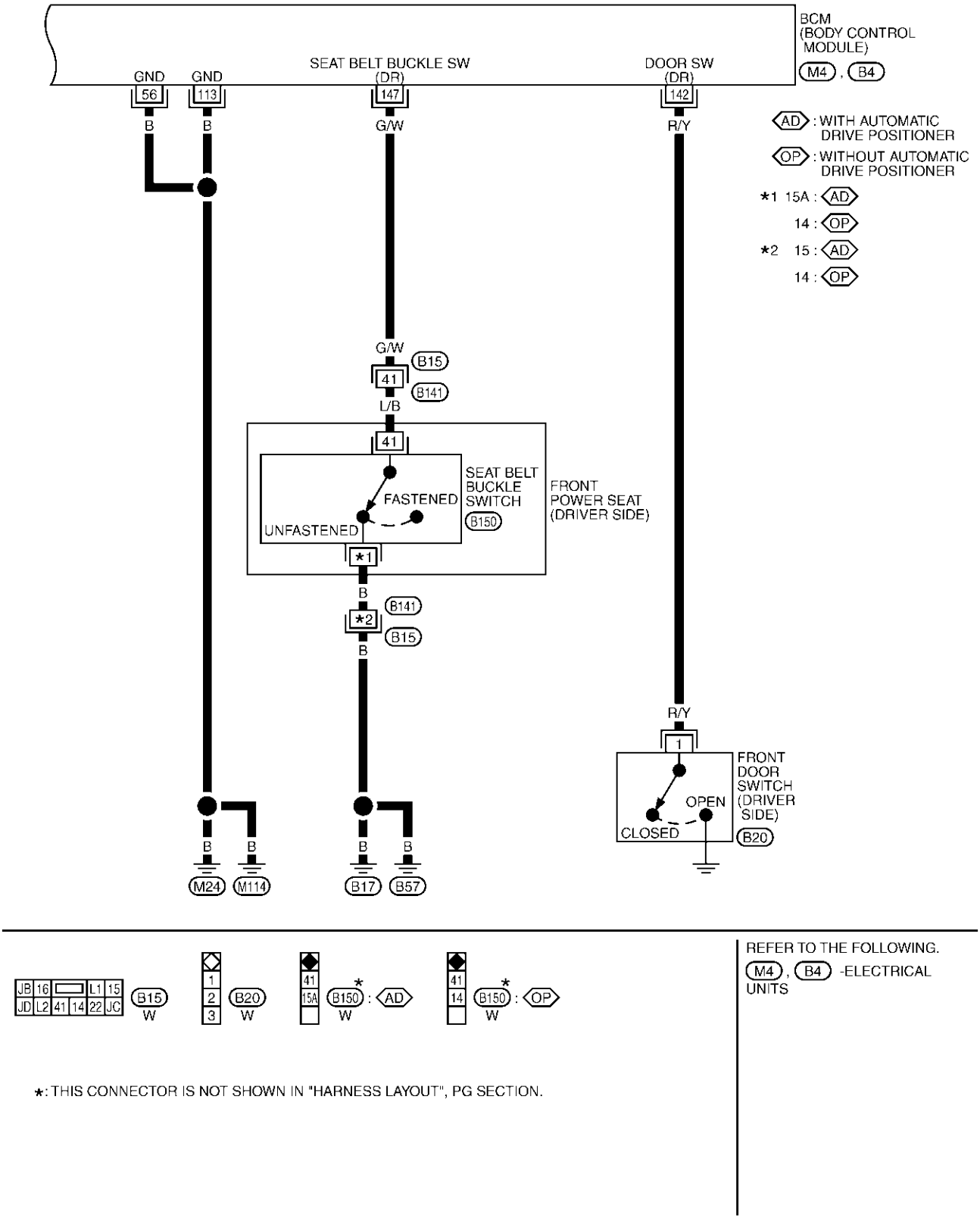

REFER TO THE FOLLOWING.
M4 , B4 -ELECTRICAL UNITS

*: THIS CONNECTOR IS NOT SHOWN IN "HARNESS LAYOUT", PG SECTION.

TKWA0596E

DI-CHIME-04

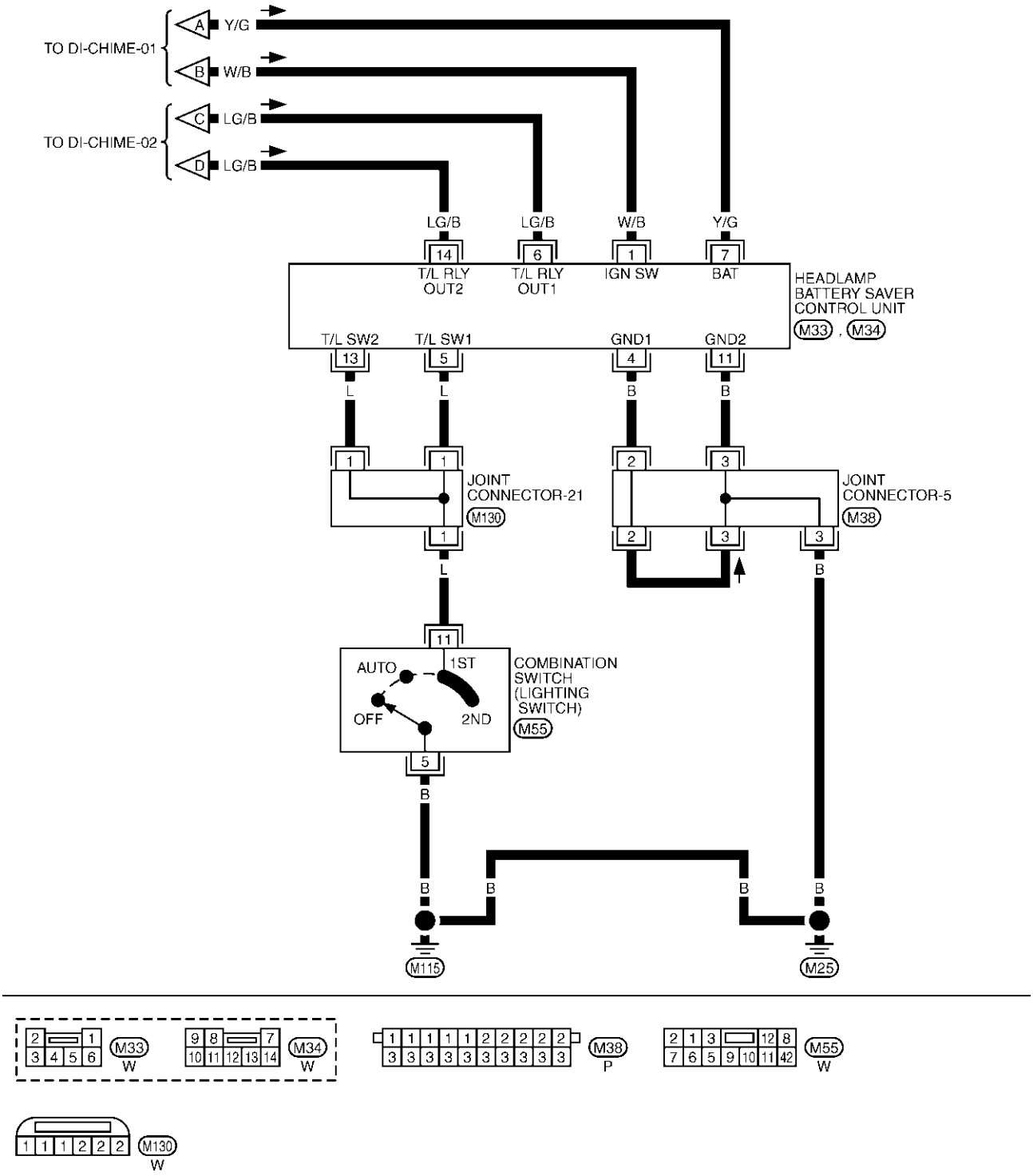

TKWA0597E

Terminals and Reference Value Chart for BCM

AKS002IX

Terminal No.	Wire color	Item	Condition: Operation or condition		Reference value
3	R/L	Tail lamp relay	Lighting switch position: 1ST or 2ND	ON	Approx. 12V
				OFF	Approx. 0V
12	BR	Warning chime input signal	(Ignition key warning chime) Front door (driver side): OPEN Lighting switch: OFF	Key is inserted.	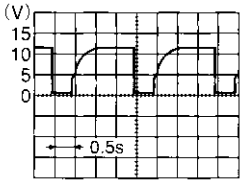 ELN0529D
				Key is removed.	Approx. 12V
			(Light warning chime) Lighting switch, Position 1ST, 2ND	Front door (driver side): Open	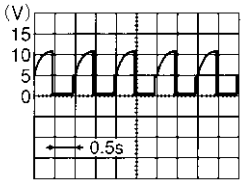 ELN0530D
				Front door (driver side): Closed	Approx. 12V
56	B	Ground	—		Approx. 0V
68	W/B	Ignition switch (ON)	Ignition switch is in “ON” position		Battery voltage
69	PU/W	Key switch	Key is removed (key switch: OFF).		Approx. 0V
			Key is inserted (key switch: ON).		Approx. 12V
105	Y/L	Battery source (BAT)	—		Battery voltage
113	B	Ground	—		Approx. 0V
142	R/Y	Front door switch (driver side)	ON (Open)		Approx. 0V
			OFF (Closed)		Approx. 12V
147	G/W	Seat belt buckle switch (driver side)	Ignition switch is “ON” position	Fasten	Approx. 5V
				Unfasten	Approx. 0V

Work Flow

AKS002IY

1. Check the trouble symptom and customer's requests.
2. Understand the outline of system. Refer to DI-52, "System Description" .
3. Perform the preliminary check. Refer to DI-60, "Preliminary Inspection" .
4. Referring to Trouble diagnosis chart, repair or replace the cause of the incident. Refer to DI-64, "Symptom Chart"
5. Does warning chime system operate normally? If it operates normally, Go to step 6. If not, Go to step 4.
6. Inspection end.

Preliminary Inspection

AKS004OA

INSPECTION FOR POWER SUPPLY AND GROUND CIRCUIT

1. CHECK FUSES

Check that any of the following fuses for the BCM is blown.

Unit	Power souse	Fuse No.
BCM	Battery	3
	Ignition switch (ON)	1
Warning chime	Battery	6

Refer to DI-55, "Wiring Diagram — CHIME —" .

OK or NG

OK >> GO TO 2.
NG >> If fuse is blown, be sure to eliminate cause of malfunction before installing new fuse. Refer to PG-2, "POWER SUPPLY ROUTING" .

2. CHECK POWER SUPPLY CIRCUIT

1. Disconnect BCM connector.
2. Check voltage between BCM connector M4 terminal 68 (W/B), 105 (Y/L) and ground.

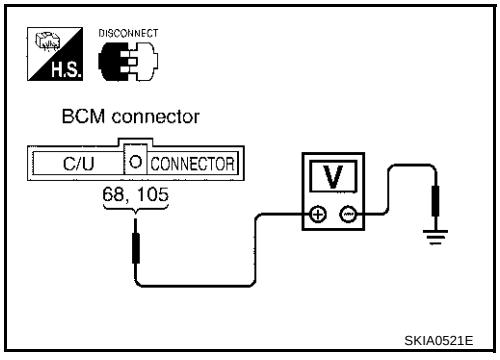

Terminals			Ignition switch position		
(+)		(-)	OFF	ACC	ON
Connector	Terminal (Wire color)				
M4	68 (W/B)	Ground	0V	0V	Battery voltage
M4	105 (Y/L)	Ground	Battery voltage	Battery voltage	Battery voltage

OK or NG

OK >> GO TO 3.
NG >> Check harness for open or short between BCM and fuse.

3. CHECK GROUND CIRCUIT

Check continuity between BCM harness connector M4 terminals 56 (B), 113 (B) and ground.

Continuity should exist.

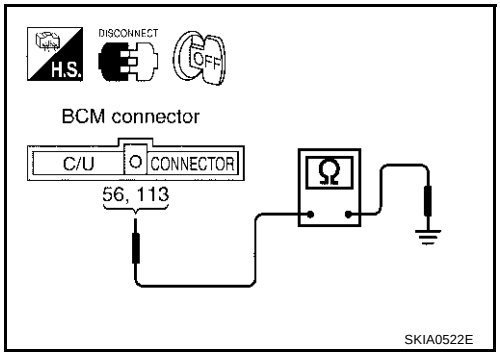

OK or NG

OK >> Inspection end.
NG >> Repair harness.

CONSULT-II Function

AKS004OB

- CONSULT-II executes the following functions by combining data reception and command transmission via the communication line from BCM. IVMS communication inspection, work support (only function setting of seats and steering wheel), self-diagnosis, data monitor, and active test display.

DIAGNOSTIC ITEMS DESCRIPTION

IVMS diagnosis position	Diagnosis mode	Description
IGN KEY WARN ALM	Data monitor	The input data to the BCM control unit is displayed in real time.
	Active test	Operation of electrical loads can be checked by sending driving signal to them.
LIGHT WARN ALM	Data monitor	The input data to the BCM control unit is displayed in real time.
	Active test	Operation of electrical loads can be checked by sending driving signal to them.
SEAT BELT TIMER	Data monitor	The input data to the BCM control unit is displayed in real time.
	Active test	Operation of electrical loads can be checked by sending driving signal to them.
BCM PART NUMBER		Displays BCM part No.

CONSULT-II BASIC OPERATION PROCEDURE

1. With the ignition switch OFF, connect “CONSULT-II” and “CONSULT-II CONVERTER” to the data link connector, and turn the ignition switch ON.

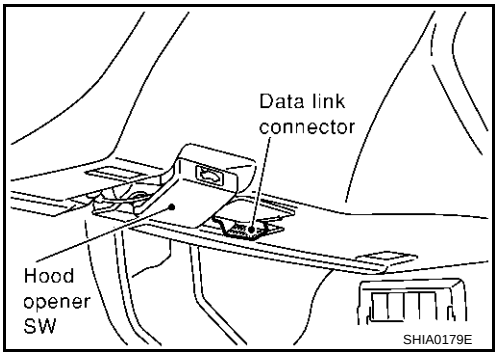

2. Touch “START (NISSAN BASED VHCL)”.

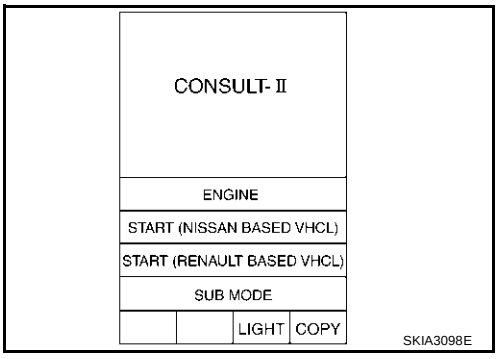

3. Touch “IVMS” on “SELECT SYSTEM” screen.
If “IVMS” is not indicated, go to GI-38, "CONSULT-II Data Link Connector (DLC) Circuit" .

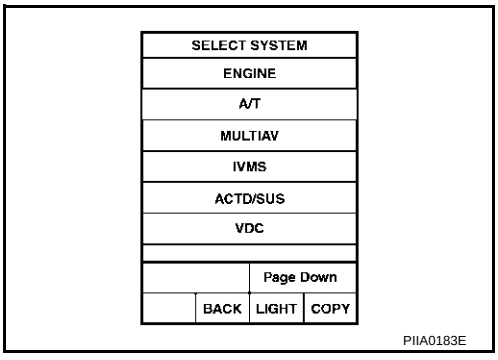

4. Check the model specification, touch either “WITH SUNROOF” or “WITHOUT SUNROOF”.
5. Touch “OK”. If the selection is wrong, touch “CANCEL”.

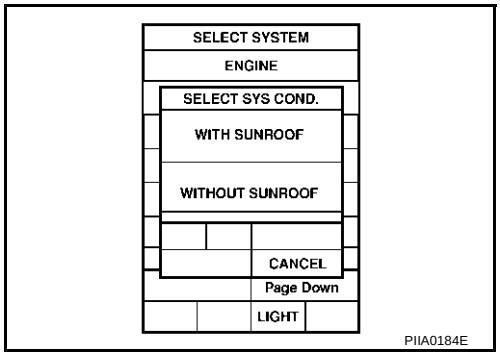

6. Select the desired part to be diagnosed on the “SELECT TEST ITEM” screen.

DATA MONITOR

Operation Procedure

1. Touch “IGN WARN ALM”, “LIGHT WARN ALM” or “SEAT BELT WARM” on “SELECT TEST ITEM” screen.
2. Touch “DATA MONITOR” on “SELECT DIAG MODE” screen.
3. Touch “MAIN SIGNALS” or “SELECTION FROM MENU” on “DATA MONITOR” screen.

MAIN SIGNALS	Monitors the main items.
SELECTION FROM MENU	Selects and monitors the items.

4. Touch “START”.
5. If “SELECTION FROM MENU” is selected, touch the desired monitor item. If “MAIN SIGNALS” is selected, the main item required to control is monitored.
6. During monitoring, touching “COPY” can start recording the monitor item status.

Data Monitor Item (Key Warning Chime)

Monitored item	Description
IGN KEY SW	Indicates [ON/OFF] condition of electronic key switch.
IGN ON SW	Indicates [ON/OFF] condition of ignition switch.
DOOR SW-DR	Indicates [ON/OFF] condition of front door switch LH.

Data Monitor Item (Light Warning Chime)

Monitored item	Description
IGN ON SW	Indicates [ON/OFF] condition of ignition switch.
DOOR SW-DR	Indicates [ON/OFF] condition of front door switch LH.
HD/LAMP 1ST SW	Indicates [ON/OFF] condition of lighting switch.

Data Monitor Item (Seat Belt Warning Chime)

Monitored item	Description
IGN ON SW	Indicates [ON/OFF] condition of ignition switch.
SEAT BELT SW	Indicates [ON/OFF] condition of fastening belt buckle switch.

ACTIVE TEST

Operation Procedure

1. Touch “IGN WARN ALM”, “LIGHT WARN ALM” or “SEAT BELT WARM” on “SELECT TEST ITEM” screen.
2. Touch “ACTIVE TEST” on “SELECT DIAG MODE” screen.
3. Touch the item to be tested, and check the operation.
4. During the operation check, touching “OFF” deactivates the operation.

Active Test Item (Key Warning Chime)

Test item	Malfunction detecting condition
CHIME	This test is able to check key warning chime operation. Key warning chime sounds for 2 seconds after touching “ON” on CONSULT-II screen.

Active Test Item (Light Warning Chime)

Test item	Malfunction detecting condition
CHIME	This test is able to check light warning chime operation. Light warning chime sounds for 2 seconds after touching “ON” on CONSULT-II screen.

Active Test Item (Seat Belt Warning Chime)

Test item	Malfunction detecting condition
CHIME	This test is able to check seat belt warning chime operation. Seat belt warning chime sounds for 2 seconds after touching “ON” on CONSULT-II screen.

On Board Diagnosis

AKS002J1

ON BOARD DIAGNOSTIC RESULTS INDICATOR LAMP

- Map lamps and step lamps (all seats) act an the indicators for the on board diagnosis.

DIAGNOSIS ITEM

Diagnosis item	Description
Switch monitor	Monitoring conditions of switches connected to BCM.

SWITCH MONITOR

- Perform the diagnosis on the switch system to each control unit.

How to Perform Switch Monitor

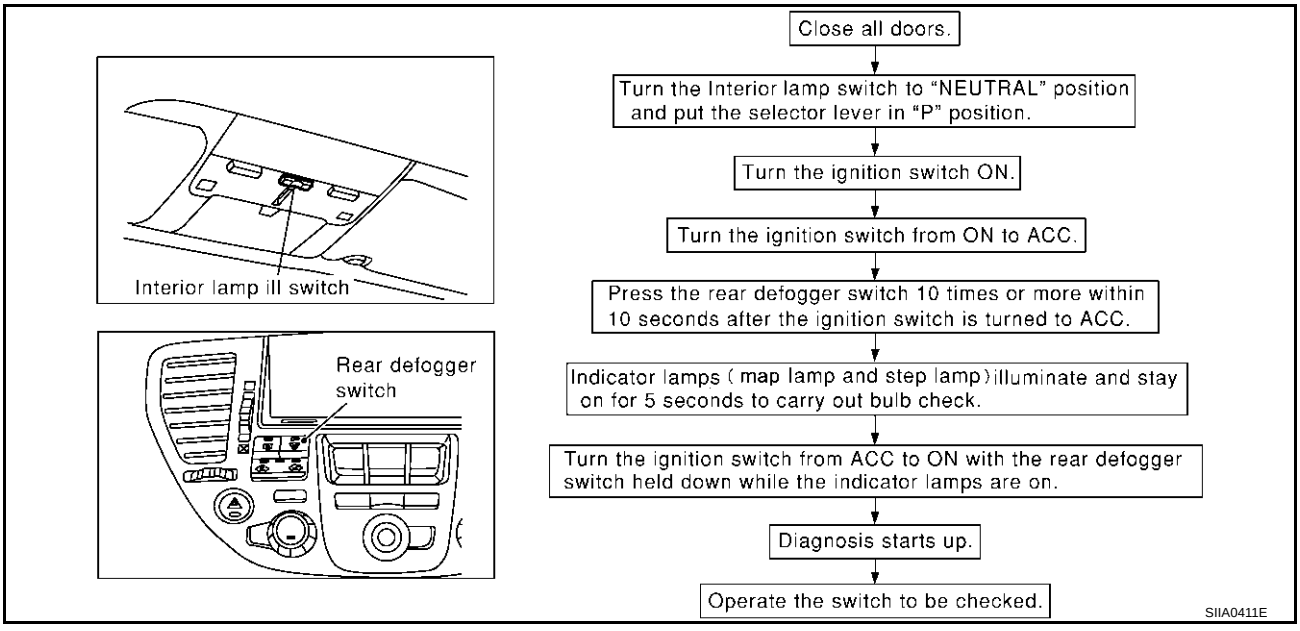

Description

- In this mode, when BCM detects the input signal from a switch in IVMS as shown below, the detection is indicated by the map lamps and front step lamps with buzzer.

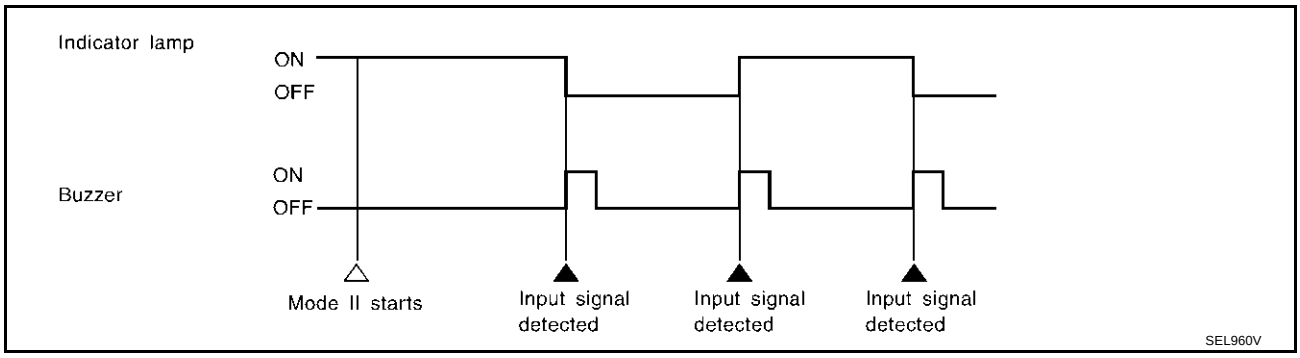

Switch Monitor Item

- The status of the switch (except the ignition switch, interior lamp ill switch, and map lamp switch) as input to each control unit can be monitored.

BCM	Driver door switch
	Lighting switch (1ST)
	Seat belt buckle switch

Cancel of Switch Monitor

- Turn ignition switch OFF
- Drive the vehicle at more than 7km/h (4MPH).

Symptom Chart

AKS002J2

Symptom	Possible cause and repair order
All warning chime does not activate	● Warning chime circuit check. Refer to DI-65, "Warning Chime Circuit Inspection" . If the above systems are work properly, replace the BCM.
Light warning chime does not activate (headlamp system is properly).	● Lighting switch input signal check. Refer to DI-68, "Lighting Switch Input Signal Inspection" . ● Front door switch (driver side) check. Refer to DI-66, "Front Door Switch (Driver side) Inspection" . If the above systems are work properly, replace the BCM.
Key warning chime does not activate.	● Key switch insert signal check. Refer to DI-67, "Key Switch Insert Signal Inspection" . ● Front door switch (driver side) check. Refer to DI-66, "Front Door Switch (Driver side) Inspection" . If the above systems are work properly, replace the BCM.
Seat belt warning chime does not activate.	● Check seat belt buckle switch input signal check. Refer to DI-70, "Seat Belt Buckle Switch Inspection" . If the above systems are work properly, replace the BCM.
With the ignition switch turned OFF and the door closed (driver side), turning the lighting switch ON (1st) activates the chime.	● Door switch (driver side) check. Refer to DI-66, "Front Door Switch (Driver side) Inspection" . If the above systems are work properly, replace the BCM.

Warning Chime Circuit Inspection

AKS004OC

1. CHECK FUSES

Check 10A fuse [No. 6 located in fuse block (J/B) NO. 1]

OK or NG

OK >> GO TO 2.
NG >> Replace the fuse.

2. CHECK POWER SUPPLY CIRCUIT

1. Turn ignition switch OFF.
2. Disconnect warning chime connector.
3. Check voltage between warning chime harness connector M74 terminal 1 (Y/G) and ground.

Battery voltage should exist.

OK or NG

OK >> GO TO 3.
NG >> Check harness for open or short between fuse and warning chime.

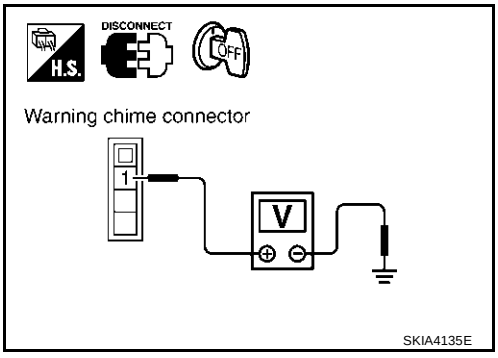

3. CHECK WARNING CHIME SHORT CIRCUIT

1. Disconnect BCM connector.
2. Check continuity between warning chime harness connector M74 terminal 3 (BR) and ground.

Continuity should not exist.

OK or NG

OK >> GO TO 4.
NO >> Repair harness or connector.

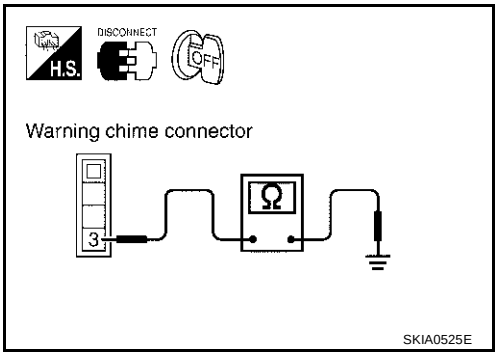

4. CHECK WARNING CHIME OPEN CIRCUIT

Check continuity between warning chime harness connector M74 terminal 3 (BR) and BCM harness connector M4 terminal 12 (BR).

Continuity should exist.

OK or NG

OK >> GO TO 5.
NG >> Repair harness or connector.

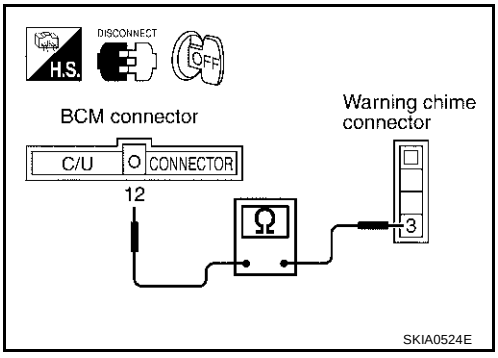

5. CHECK WARNING CHIME OPERATION

1. Connect warning chime connector.
2. Ground warning chime harness connector M74 terminal 3 (BR).

Warning chime should operate.

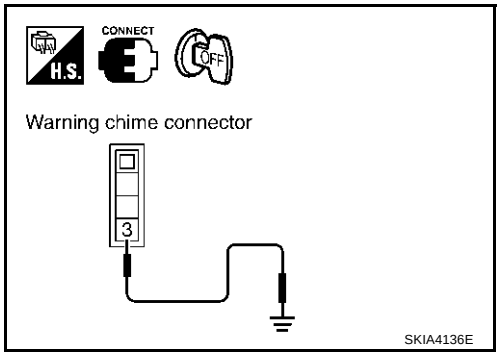

OK or NG

OK >> Replace BCM.
NG >> Replace warning chime.

Front Door Switch (Driver side) Inspection

AKS004OD

1. CHECK FRONT DOOR SWITCH (DRIVER SIDE) INPUT SIGNAL

With CONSULT-II

Check front door switch (“DOOR SW-DR”) in “DATA MONITOR” mode with CONSULT-II.

When driver’s door is open :DOOR SW-DR ON

When driver’s door is closed :DOOR SW-DR OFF

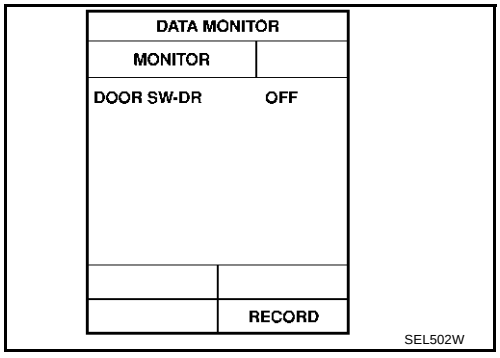

Without CONSULT-II

Check front door switch (driver side) in “SWITCH MONITOR” mode, refer to DI-63, "On Board Diagnosis" .

OK or NG

OK >> Front door switch (driver side) is OK.
NG >> GO TO 2.

2. CHECK DOOR SWITCH OPEN OR SHORT CIRCUIT

1. Disconnect BCM connector and front door switch (driver side) connector.
2. Check the following.

Terminals				Continuity
(+)		(–)		
Connector	Terminal (Wire color)	Connector	Terminal (Wire color)	
B4	142 (R/Y)	B20	1 (R/Y)	Yes
		Ground		No

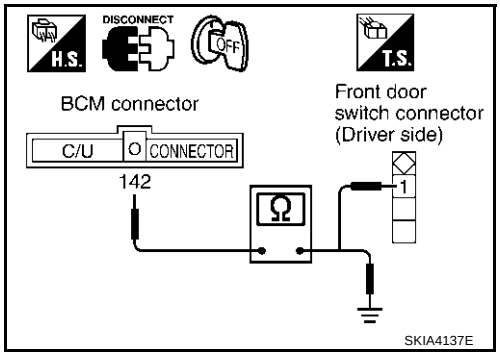

OK or NG

OK >> GO TO 3.
NG >> Repair harness or connector.

3. CHECK DOOR SWITCH (DRIVER SIDE)

Check continuity between front door switch (driver side) and ground.

Terminals			Condition	Continuity
(+)		(–)		
Connector	Terminal			
B20	1	Ground	Door is opened	Yes
			Door is closed	No

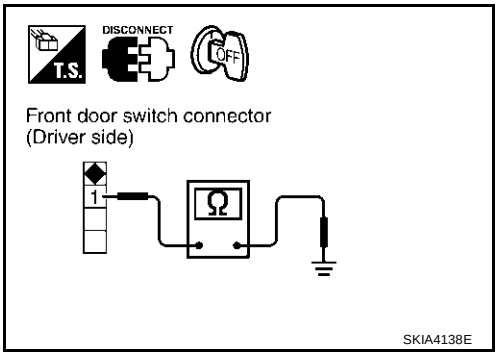

OK or NG

OK >> Front door switch (driver side) is OK.
No >> Replace front door switch (driver side).

Key Switch Insert Signal Inspection

AKS004OE

1. CHECK KEY SWITCH INPUT SIGNAL

With CONSULT-II

Check key switch ("IGN KEY SW") in "DATA MONITOR" mode with CONSULT-II.

When key is inserted to ignition key cylinder : IGN KEY SW ON

When key is removed to ignition key cylinder : IGN KEY SW OFF

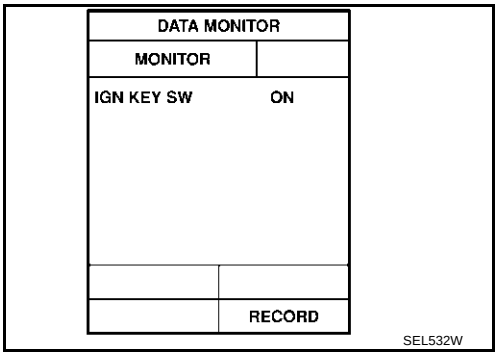

Without CONSULT-II

1. Disconnect the BCM connector.
2. Check voltage between BCM and ground.

Terminals			Condition	Voltage
(+)		(–)		
Connector	Terminal (Wire color)			
M4	69 (PU/W)	Ground	key is inserted	Battery voltage
			key is removed	Approx. 0V

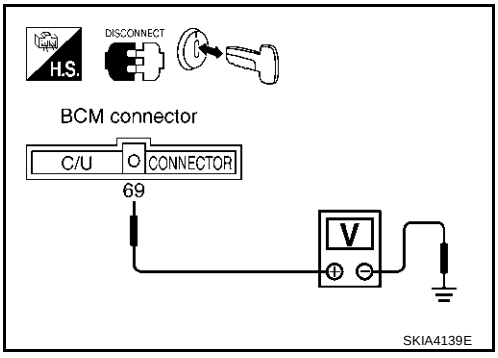

OK or NG

OK >> Key switch and key lock solenoid (key switch) is OK.
NG >> GO TO 2.

2. CHECK KEY SWITCH CIRCUIT

1. Remove the key from the ignition key cylinder.
2. Disconnect key switch and key lock solenoid (key switch) connector.
3. Check continuity between BCM harness connector M4 terminal 69 (PU/W) and key switch and key lock solenoid (key switch) harness connector M64 terminal 4 (PU/W).

Continuity should exist.

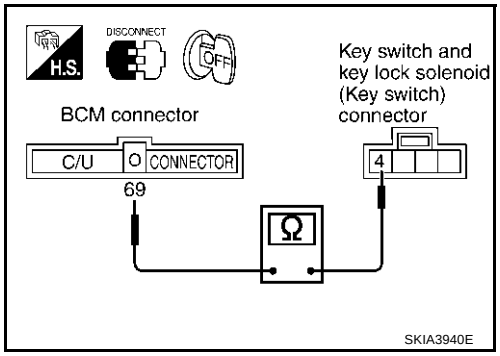

OK or NG

OK >> GO TO 3.
NG >> Repair harness or connector.

3. CHECK KEY SWITCH (INSERT)

Check continuity key switch and key lock solenoid (key switch).

Connector	Terminal		Condition	Continuity
	(+)	(–)		
M64	3	4	key is inserted	Yes
			key is removed	No

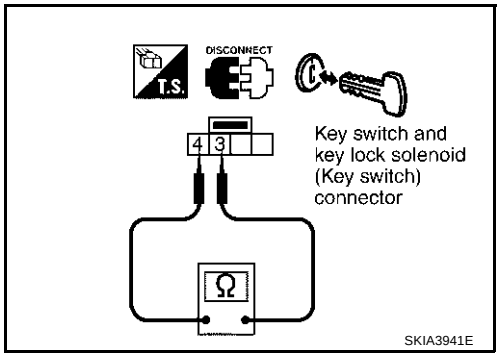

OK or NG

OK >> Inspection end.
NG >> Replace key switch and key lock solenoid (key switch).

Lighting Switch Input Signal Inspection

AKS004OF

1. CHECK LIGHTING SWITCH INPUT SIGNAL

With CONSULT-II

Check Lighting switch (“HD/LMP 1ST SW”) in “DATA MONITOR” mode with CONSULT-II.

When lighting switch is 1ST or 2ND : HD/LMP 1ST SW ON

When lighting switch is OFF : HD/LMP 1ST SW OFF

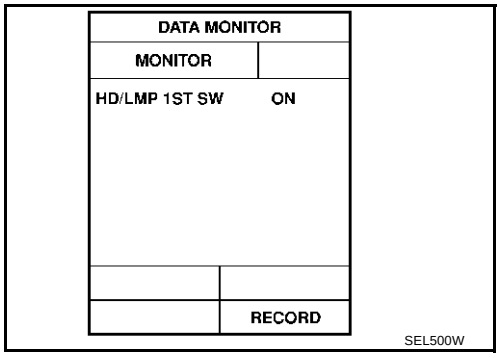

Without CONSULT-II

Check lighting switch in switch monitor mode, refer to DI-63, "On Board Diagnosis" .

OK or NG

OK >> Lighting switch is OK.
NG >> GO TO 2.

2. CHECK TAIL LAMP RELAY CONTROL SIGNAL

1. Turn ignition switch OFF.
2. Disconnect BCM connector.
3. Check voltage between BCM and ground.

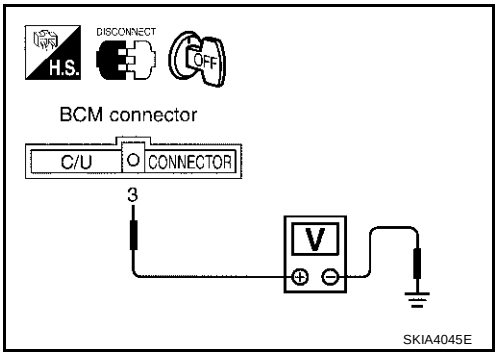

Terminals			Condition	Voltage
(+)		(–)		
Connector	Terminal (Wire color)			
M4	3 (R/L)	Ground	Lighting switch 1st or 2nd	Battery voltage
			Lighting switch OFF	Approx. 0V

OK or NG

OK >> Inspection end.
NG >> Check harness for open or short between BCM and tail lamp relay.

Seat Belt Buckle Switch Inspection

AKS004OG

1. CHECK SEAT BELT BUCKLE SWITCH INPUT SIGNAL

With CONSULT-II

Check seat belt buckle switch ("SEAT BELT SW") in "DATA MONITOR" mode with CONSULT-II.

When seat belt fastened : SEAT BELT SW ON

When seat belt unfastened : SEAT BELT SW OFF

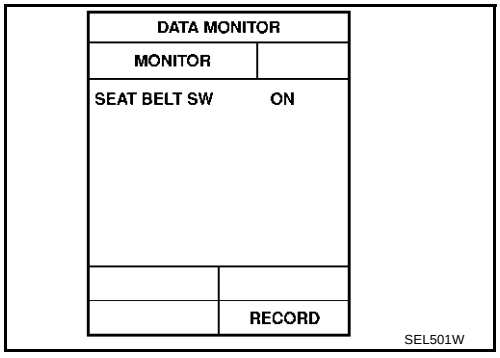

Without CONSULT-II

Check seat belt buckle switch in switch monitor mode, refer to DI-63, "On Board Diagnosis" .

OK or NG

OK >> Seat belt buckle switch is OK.
NG >> GO TO 2.

2. CHECK SEAT BELT BUCKLE SWITCH

1. Turn ignition switch OFF.
2. Disconnect seat belt buckle switch connector.
3. Check continuity seat belt buckle switch.

– **With automatic drive positioner**

Terminals (Wire color)		Condition	Continuity
41 (L/B)	15A (B)	Fastened	No
		Unfastened	Yes

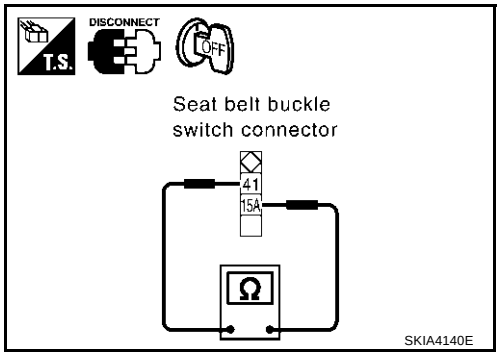

– **Without automatic drive positioner**

Terminals (Wire color)		Condition	Continuity
41 (L/B)	14 (B)	Fastened	No
		Unfastened	Yes

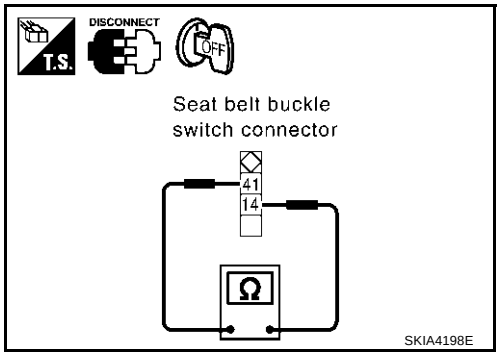

OK or NG

OK >> GO TO 3.
NG >> Replace seat belt buckle switch.

3. CHECK SEAT BELT BUCKLE SWITCH CIRCUIT

1. Disconnect BCM connector.
2. Check continuity between BCM harness connector B4 terminal 147 (G/W) and seat belt buckle switch harness connector B150 terminal 41 (L/B).

Continuity should exist.

OK or NG

OK >> GO TO 4.
NG >> Repair harness or connector.

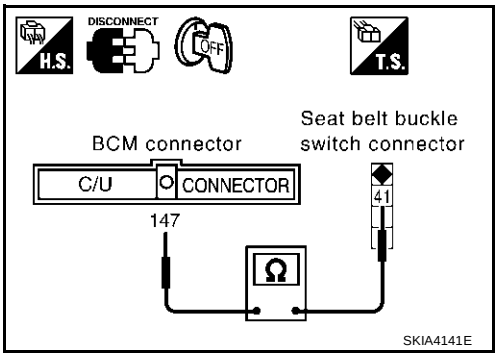

4. CHECK SEAT BELT BUCKLE SWITCH GROUND CIRCUIT

Check continuity between seat belt buckle connector B150 terminal 15A (B) (with automatic drive positioner) or 14 (B) (without automatic drive positioner) and ground.

- **With automatic drive positioner**

15A – Ground : Continuity should exist.

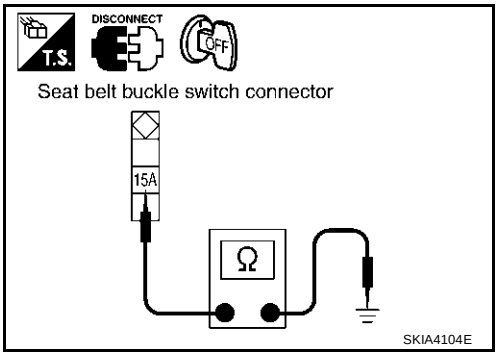

- **Without automatic drive positioner**

14 – Ground : Continuity should exist.

OK or NG

OK >> Inspection end.
NG >> Repair harness or connector.

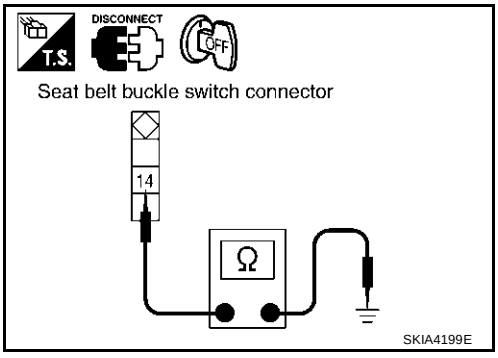

Removal and Installation of Warning Chime

AKS002J8

REMOVAL

1. Remove cluster lid C, refer to IP-10, "INSTRUMENT PANEL ASSEMBLY" .
2. Remove bolt (1), and remove warning chime.

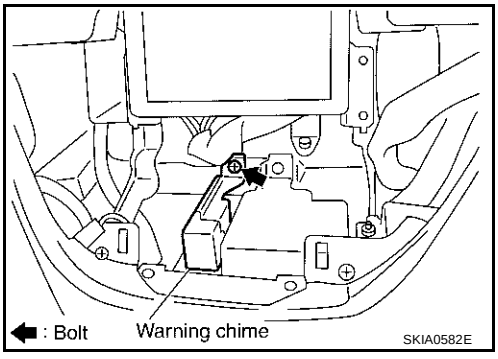

INSTALLATION

Install in the reverse order of removal.

VEHICLE INFORMATION AND INTEGRATED SWITCH SYSTEM /WITH NAVIGATION SYSTEM

PFP:28395

System Description

AKS004DL

INTEGRATED SWITCH SYSTEM

Using the multifunction switch at the center of the instrument panel, the controls of the following systems are centralized:

- Auto A/C system
- Vehicle information system
- Audio system
- Navigation system
- Hazard switch

The multifunction switch can operate and check the vehicle condition and each setting (vehicle electrical system).

PRECAUTION OF LCD MONITOR

- When passenger compartment temperature is low, the LCD monitor sometimes dims because of the brightness of the back light (small fluorescent light) integrated into the LCD monitor decrease. In this case, the refreshing rate of the picture also becomes low because of the low response of the LCD monitor. When passenger compartment becomes warm, however, the LCD recovers the normal display.
- Sometimes, black or bright dots peculiar to LCD monitor can be seen on the display.
- Back light sometimes flickers or darkens according to the total consumption hours and the number of ON and OFF switching. In this case, the back light should be replaced. (LCD monitor assembly)

POWER SUPPLY AND GROUND

Power is Supplied at All Times

- through 15A fuse [No. 52, located in fuse, fusible link and relay block (J/B)]
- to AV and NAVI control unit terminals 2 and 3, and
- to display terminals 21 and 23.

When Ignition Switch is in ACC or ON Position, Power is Supplied

- through 10A fuse [No. 21, located in fuse block (J/B) NO. 1]
- to AV and NAVI control unit terminal 6
- to display terminal 19, and
- to multifunction switch terminal 1.

When Ignition Switch is in ON or START Position, Power is Supplied

- through 10A fuse [No. 1, located in fuse block (J/B) NO. 1]
- to AV and NAVI control unit terminal 26.

Ground is Supplied

- to AV and NAVI control unit terminal 1 and 4
- through body grounds B17 and B57, and
- to multifunction switch terminal 2 and
- to display terminals 22 and 24
- through body grounds M24 and M114.

AV COMMUNICATION LINE

AV and NAVI control unit is connected to the following units by AV communication line. Each unit transmits/receives data with AV communication line.

- Display
- Multifunction switch
- Audio unit
- BOSE speaker amp.
- Rear view camera control unit

- Low tire pressure warning control unit
- Voice activated control module

VEHICLE INFORMATION SYSTEM

- AV and NAVI control unit is received vehicle information system of signals from combination meter.
- AV and NAVI control unit is communicating with BCM and combination meter.

1. Press “INFO” switch to display vehicle information display.

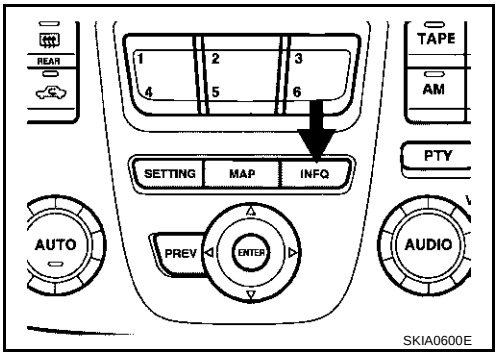

2. Select “Trip Computer”, “Fuel Economy”, “Maintenance” or “Tire pressure”.

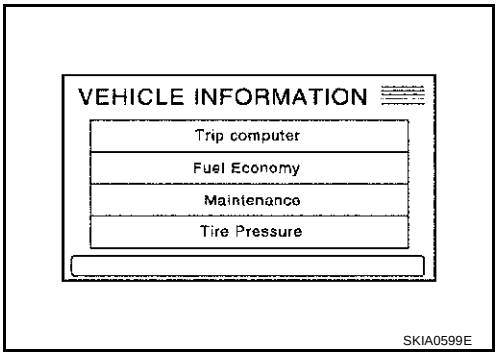

Display items	Display/Setting contents
Trip Computer	Elapsed Time
	Driving Distance
	Average speed
Fuel Economy	Average Fuel Economy (MPG)
	Distance to Empty (Miles)
	Fuel Economy (MPG)
	Fuel Economy Record
Maintenance (with Maintenance information*)	Maintenance intervals of engine oil and setting of oil change cycle
	Maintenance intervals of oil filter and setting of filter replacement cycle
	Maintenance intervals of tire and setting of tire replacement cycle
Tire Pressure	Tire pressure information.

*:Maintenance information displays the change cycle of engine oil, oil filter and tire on LCD monitor depending on the driving distance specified by a driver or a technician.

Trip Computer Information

1. Select “Trip Computer”
2. Elapsed time, Driving distance and Average speed are displayed as Trip Computer information.

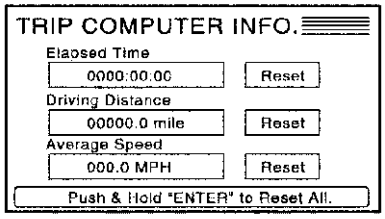

SKIA0601E

Fuel Economy Information

1. Select “Fuel Economy”
2. Average Fuel Economy, Distance to Empty, Fuel Economy are displayed as Fuel Economy information.

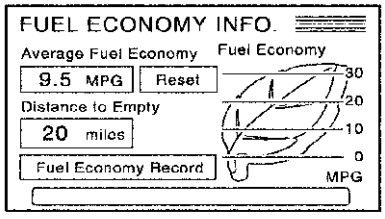

SKIA0602E

3. Select “Fuel Economy Record”. The average fuel consumption history will be displayed in graph along with the average for the previous Reset – to – Reset period.

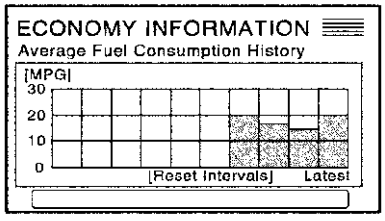

SKIA0603E

Maintenance Information

1. Select “Maintenance”
2. Engine Oil, Oil Filter and Tire Rotation are displayed as Maintenance information.

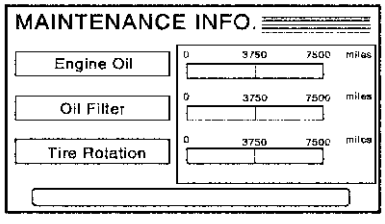

SKIA0604E

Tire Pressure Information

1. Select “Tire Pressure”
2. Tire pressure displayed as Tire pressure information

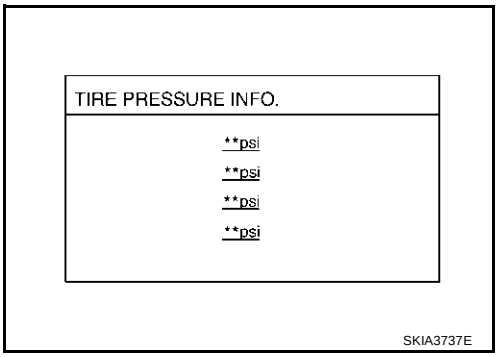

NOTE:

- When air pressure becomes 180kPa (1.8kg/cm^2 , 26psi) or less, “LOW PRESSURE” warning is indicated.
- When air pressure becomes 70kPa (0.7kg/cm^2 , 10psi) or less, “FLAT TIRE” warning is indicated.
- When pressure is not detected or tire pressure system has problem “** psi” is indicated.
- Indication with yellow frame for the malfunctioning tire.

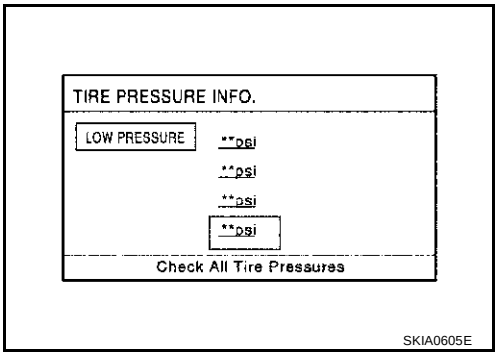

SETTING OF VEHICLE STATUS

- Setting of electric status can be changed by multifunction switch.The signal is sent to BCM through AV and NAVI control unit to change vehicle electric system setting.
- AV and NAVI control unit is communicating with BCM and combination meter.

1. Press “SETTING” switch to display vehicle information display.

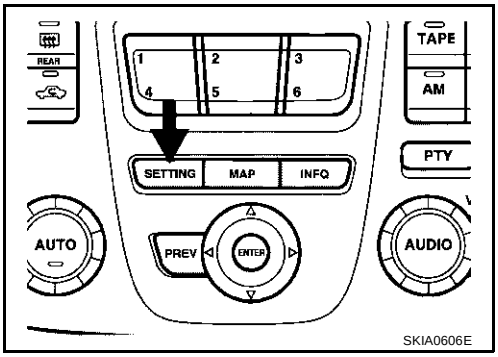

2. Select “Vehicle Electronic System”.

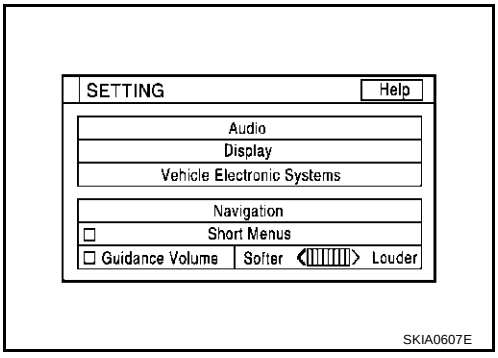

3. Select a vehicle status shown on the display.

Adjustable vehicle status

- Lift Steering Column When Exiting Vehicle.
- Adjust Driver Seat When Exiting Vehicle
- Illuminate Interior When Unlocking Vehicle
- Interior Lights Off Delay

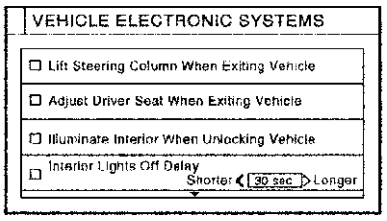

SKIA0610E

- Sensitivity of Automatic Headlights
- Automatic Headlights Off Delay
- Key Remote Response-Horn/Lights
- Remote Custom Settings

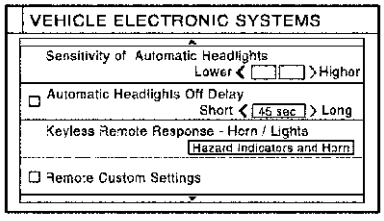

SKIA0611E

- Return All Setting to Default

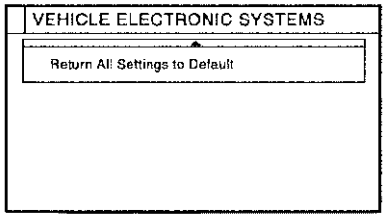

SKIA0612E

Adjustable vehicle status

Setting items	Setting variations	Initial setting	Operation
Lift Steering Column When Exiting Vehicle	ON/OFF	ON	The steering column automatically tilts up when the driver gets out, and returns to the original position when the driver gets on. ● When driver door is closed and key removed from ignition key cylinder, the steering column tilts up. ● When driver door is open and key is turned to OFF, the steering column tilts up.
Adjust Driver Seat When Exiting Vehicle	ON/OFF	ON	The driver's seat automatically slides backward when the driver gets out, and returns to the original position when the driver gets on.
Illuminate Interior When Unlocking Vehicle	ON/OFF	ON	The interior room lamps are illuminate automatically when the door unlocked with key or key fob.
Interior Lights Off Delay	OFF/15/30/45 sec.	30 sec.	Interior room lamp timer period can be changed in this mode. Selects interior room lamp timer.
Sensitivity of Automatic Headlights	1/2/3/4	3	Sensitivity of auto light sensor can be adjusted.
Automatic Headlights Off Delay	OFF/20/45/90/120/150/180 sec.	45 sec.	Auto light delay off timer period can be changed in this mode. Selects auto light delay off timer.
Key Remote Response - Horn/Lights	Hazard indicators only /Hazard indicators and horn	Hazard indicators only	Hazard indicators Only: ● Lock operation: The hazard warning lamp flash twice when lock the doors with key fob. ● Unlock operation: No response. Hazard indicators and horn: ● Lock operation: The hazard warning lamp flash twice and horn sounds once when lock the doors with key fob. ● Unlock operation; The hazard warning lamp flash once when unlock the doors with key fob.
Remote Custom Settings	ON/OFF	ON	The driving position -seat and steering column- and the audio setting -current source and radio station presets- are set to the same condition you made last time by identifying the key fob ID. This function operates when unlock the doors by using the key fob. **NOTE:** It is necessary to memorize the driving position before using this function.
Return All Settings to Default	None	None	If this key is selected, all vehicle electronic systems setting are return to default.

WARNING INDICATIONS

When combination meter receives warning signal from some control units or sensors, then combination meter warning lamp is illuminated.
Then combination meter sends warning signal to AV and NAVI control unit to display warning indications on the screen.

Warning indicators	Warning lamps in instrument panel	Warning detection and cancel conditions		Cases of malfunction
MALFUNCTION	SERVICE ENGINE SOON	Detection condition	Warning lamp ON signal is detected while engine is running.	ECM malfunction
		Cancel condition	Warning lamp OFF signal is detected.	
ENGINE OIL PRESSURE	Engine oil pressure	Detection condition	Warning lamp ON signal is detected for at least approx. 5 seconds while engine is running. [Engine oil pressure: MAX. approx. 29kPa(0.3kg/cm^2 , 4psi)]	Engine oil pressure decreases
		Cancel condition	Warning lamp OFF signal is detected. [Engine oil pressure: MIN. approx.29kPa(0.3kg/cm^2 ,4psi)]	
SUPPLEMENTAL AIR BAG	Air bag	Detection condition	Warning lamp ON signal is detected for at least approx. 10 seconds after ignition switch is turned ON.	SRS air bag system malfunction
		Cancel condition	Warning lamp OFF signal is detected.	
LOW BRAKE FLUID	Brake	Detection condition	Warning lamp ON signal (fluid level) is detected.	Low brake fluid level
		Cancel condition	Warning lamp OFF signal is detected.	
OVERHEATING	–	Detection condition	Engine coolant temperature as being approx. 119°C (246°F) min.	Engine cooling system malfunction
		Cancel condition	engine coolant temperature as being approx. 105°C(221°F) max.	
CHARGE	Charge	Detection condition	Warning lamp ON signal is detected while engine is running. Charging system malfunction	Charging system malfunction
		Cancel condition	Warning lamp OFF signal is detected.	
LOW WASHER FLUID	–	Detection condition	Washer liquid level falls below approx. 0.4 ℓ.(7/8USqt, 3/4Imp pt)	Low washer liquid level
		Cancel condition	Except above condition.	
LOW FUEL	Fuel level	Detection condition	After warning lamp ON signal is detected, vehicle is driven for over specified distance. (Fuel level: Approx. 14.0 ℓ14–3/4 USqt,12–3/8 Imp pt)	Low fuel level
		Cancel condition	Warning lamp OFF signal is detected.	
PARKING BRAKE	Brake	Detection condition	Parking brake ON signal is detected while vehicle is running [approx. 5km/h (3MPH) or faster].	Parking brake remains engaged.
		Cancel condition	Vehicle is stopped, or parking brake OFF signal is detected.	

Warning indicators	Warning lamps in instrument panel	Warning detection and cancel conditions		Cases of malfunction
DOOR OPEN	Door	Detection condition	Vehicle is running [approx. 5km/h (3MPH) or faster] and door ajar of any of the doors is detected.	Door is open
		Cancel condition	Vehicle is stopped and all the doors lock.	
ANTI–LOCK BRAKE	ABS	Detection condition	Warning lamp ON signal is detected when engine is running.	ABS control system malfunction
		Cancel condition	Warning lamp OFF signal is detected.	
VEHICLE DYNAMIC CONTROL	VDC	Detection condition	Warning lamp ON signal is detected when engine is running.	VDC system malfunction
		Cancel condition	Warning lamp OFF signal is detected.	
TRACTION CONTROL SYSTEM	TCS	Detection condition	Warning lamp ON signal is detected when engine is running.	TCS system malfunction
		Cancel condition	Warning lamp OFF signal is detected.	
AUTOMATIC TRANSMISSION OIL TEMPERATURE	AT CHECK	Detection condition	Warning lamp ON signal is detected after ignition switch is turned ON.	TCM system malfunction
		Cancel condition	Warning lamp OFF signal is detected.	
TIRE PRESSURE	Tire Pressure	Detection condition	Warning lamp ON signal is detected after ignition switch is turned ON.	Low tire pressure warning control unit system malfunction
		Cancel condition	Warning lamp OFF signal is detected.	
LOW TIRE PRESSURE (TIRE PRESSURE INFO.)		Detection condition	Tire pressure 180kPa (1.8kg/cm^2 , 26psi) is detected while vehicle is running.	Tire air pressure is low
		Cancel condition	Except above condition.	
FLAT TIRE (TIRE PRESSURE INFO.)		Detection condition	Tire pressure 70kPa (0.7kg/cm^2 , 10psi) is detected while vehicle is running.	Flat tire
		Cancel condition	Except above condition.	
CRUISE CONTROL	SET	Detection condition	Warning lamp ON signal is detected after ignition switch is turned ON.	ASCD system malfunction
		Cancel condition	Warning lamp OFF signal is detected.	

Precautions for AV and NAVI Control Unit Replacement

AKS004DM

- When replacing the AV and NAVI control unit, eject the map DVD-ROM before disconnecting the battery.
- The AV and NAVI control unit has the following information stored in its memory. Record the memory contents before replacing the control unit, and input them in the new unit as necessary.

<FM·AM>	• **Preset frequency**
	• **Area for indicating station, selection of overlapped stations**
<CD>	• **Program status**
<Sound quality>	• **Volume balance memory set values**
	• **Equalizer memory set values**
<Image quality>	• **Brightness of light when ON/OFF**
	• **Dimming switching**
	• **Display color switching**
<Navigation mode>	• **Latest status (MAP screen/BIRD VIEW™, reduced scale, rotation angle of map screen, route guide ON/OFF, track ON/OFF, etc.)**
	• **Current position**
	• **Destination, passing point 1 - 5**
	• **Registered places, their names, etc.**

NOTE:
Only removing the battery does not erase the memory.

Component Parts and Harness Connector Location

AKS004DN

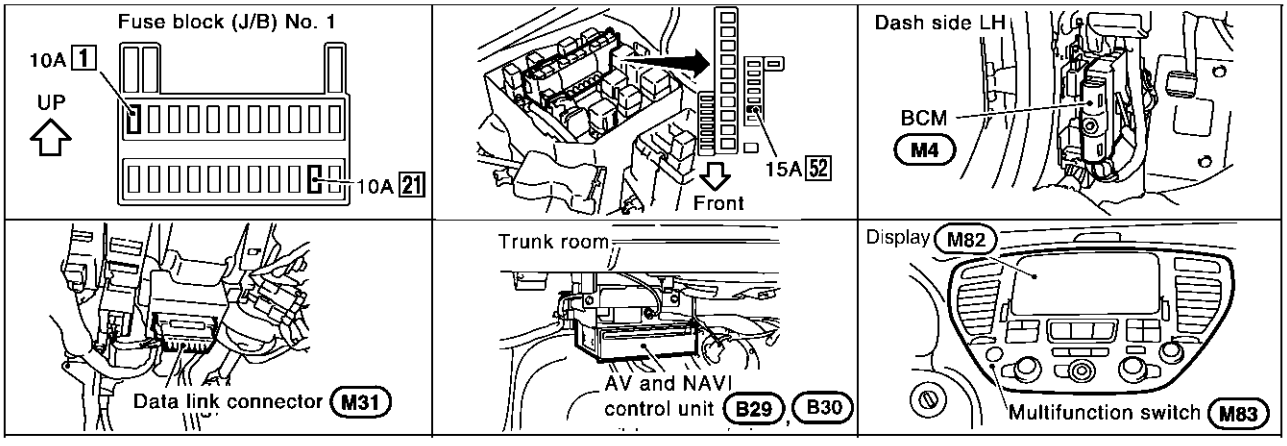

SKIA9345E

Schematic

AKS004DO

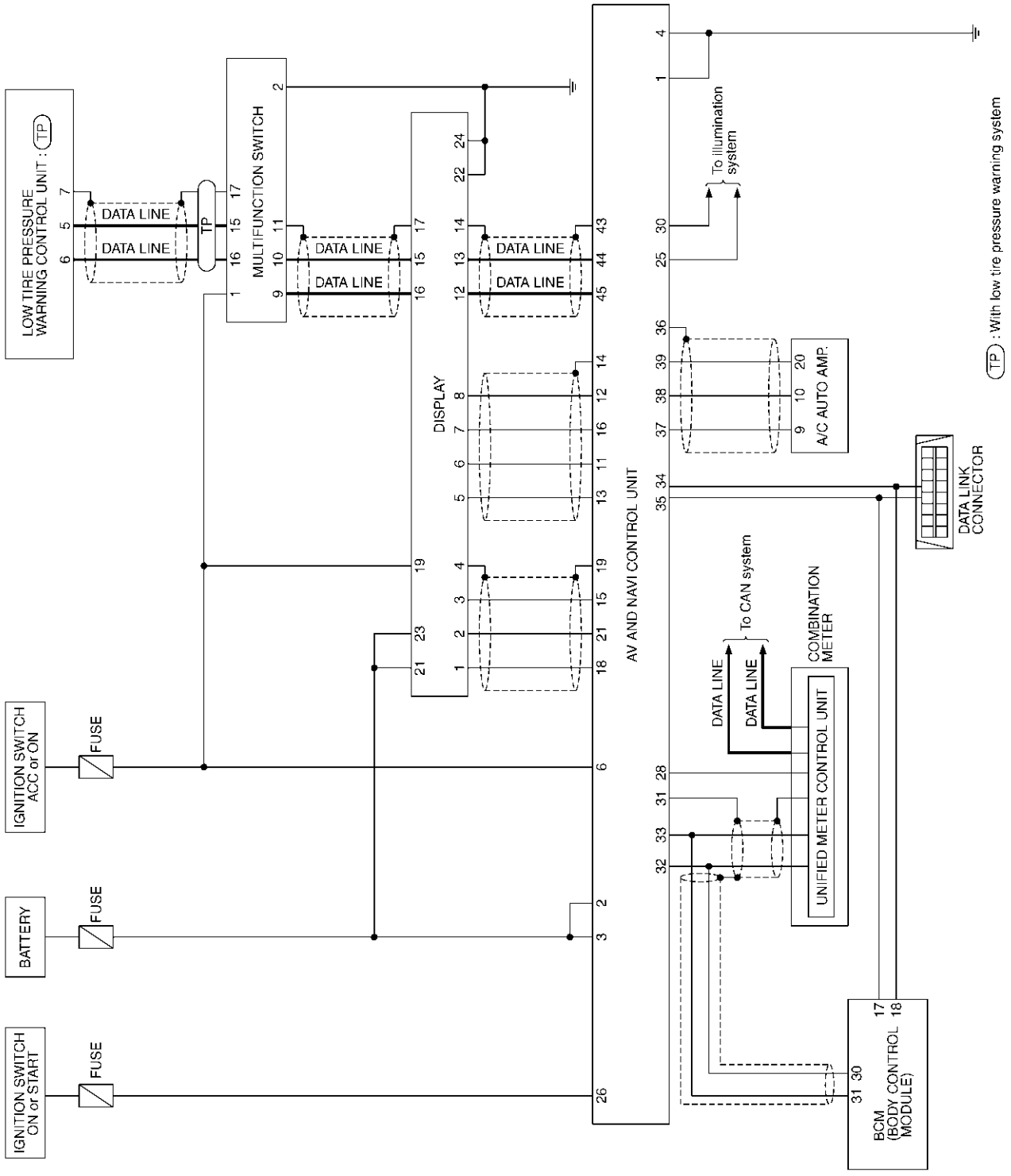

TKWA0598E

Wring Diagram — INF/D —

AKS004DP

DI-INF/D-01

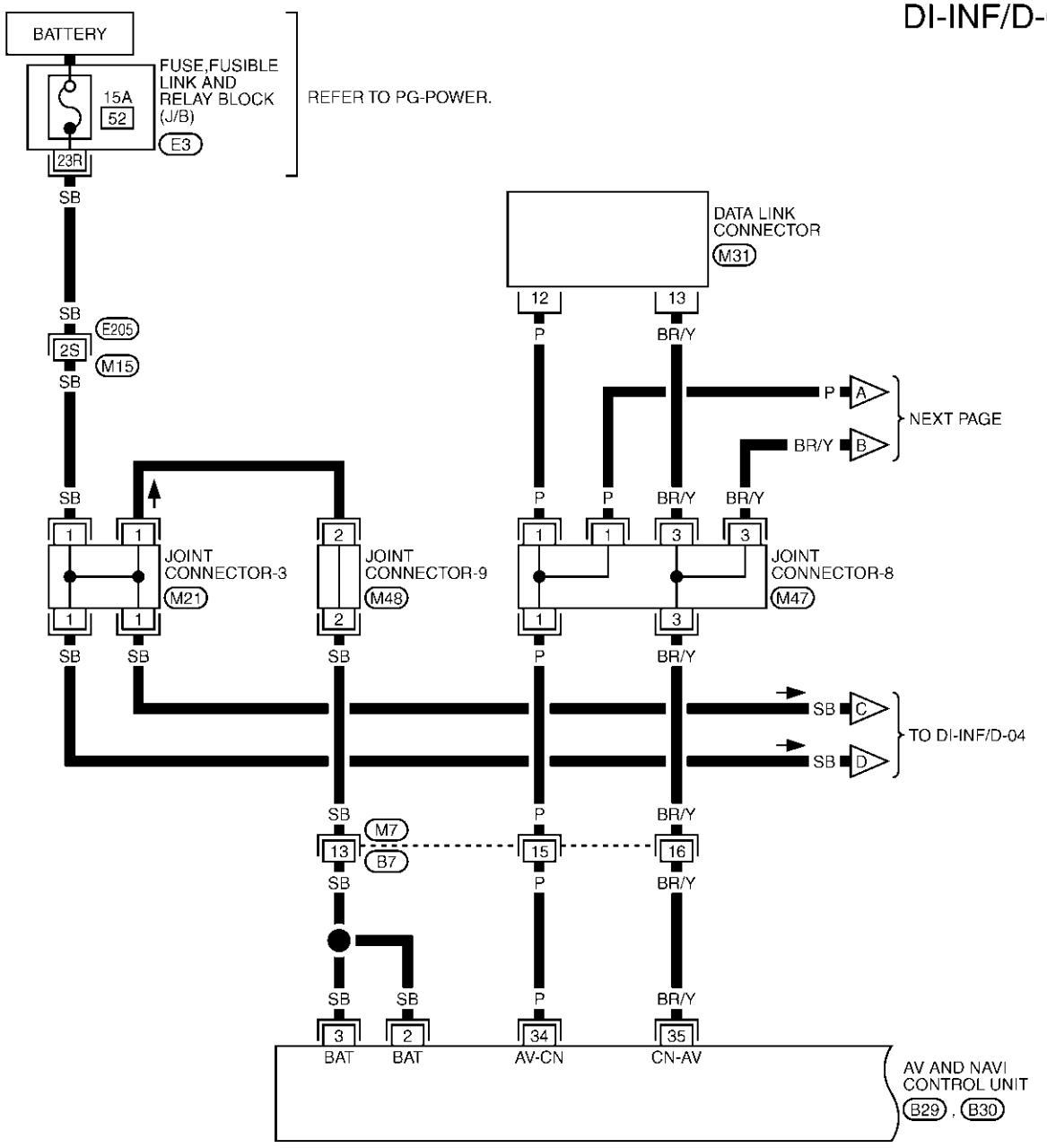

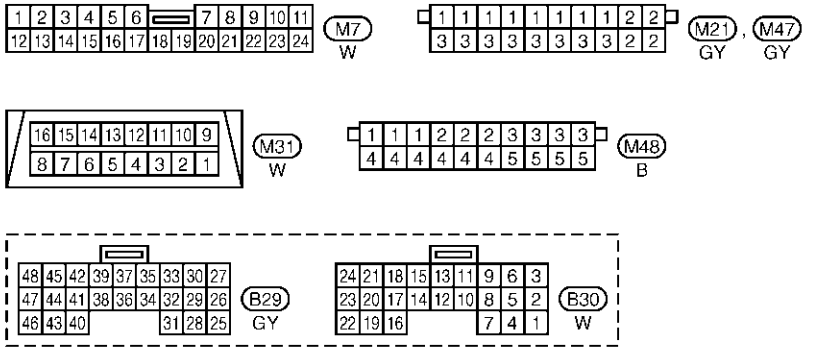

REFER TO THE FOLLOWING.

E205 -SUPER MULTIPLE JUNCTION (SMJ)

E3 -FUSE,FUSIBLE LINK AND RELAY BLOCK (J/B)

TKWA0599E

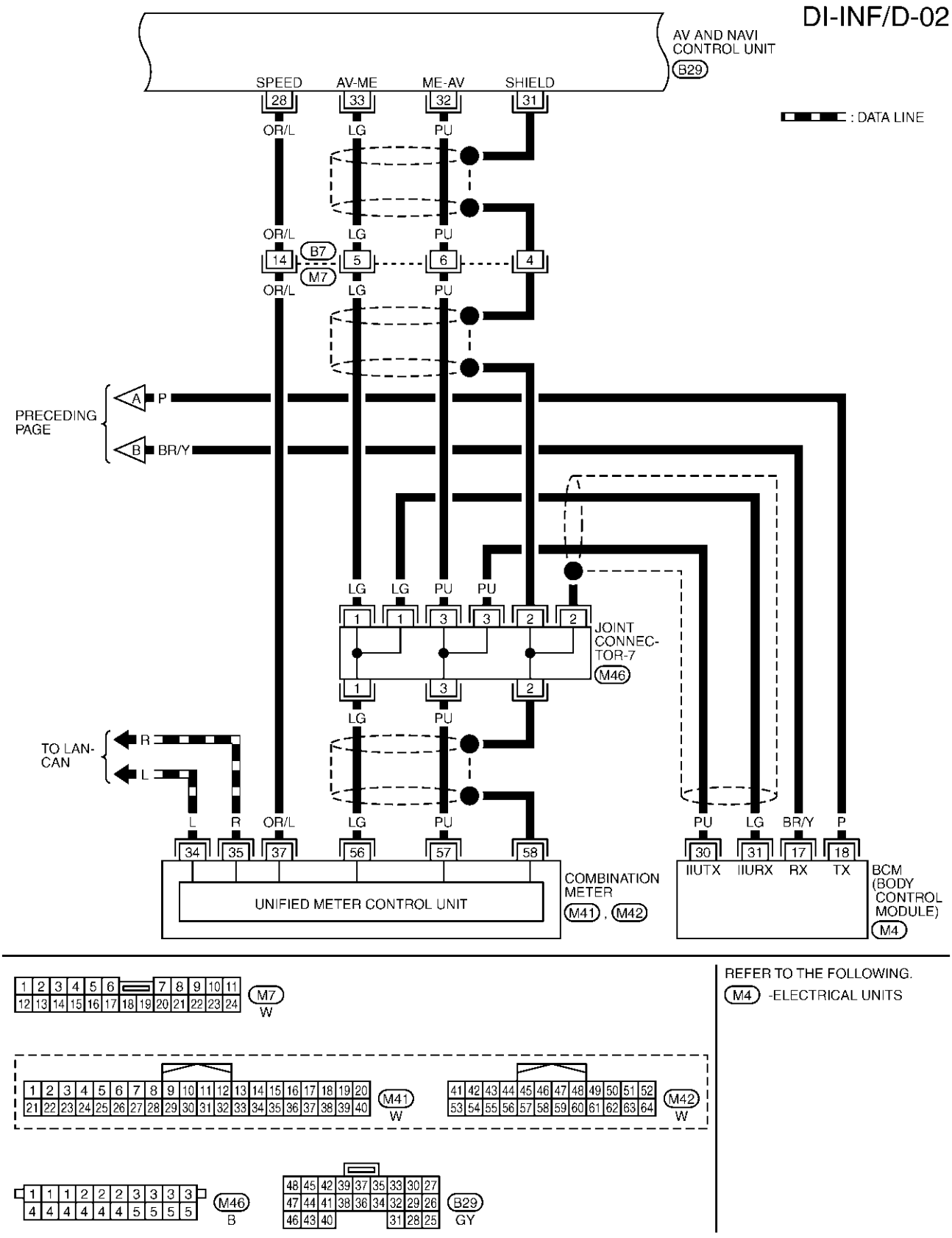
DI-INF/D-02
AV AND NAVI CONTROL UNIT
B29
SPEED
AV-ME
ME-AV
SHIELD
: DATA LINE
B7
M7
PRECEDING PAGE
JOINT CONNEC-TOR-7
M46
TO LAN-CAN
UNIFIED METER CONTROL UNIT
COMBINATION METER
M41 , M42
IIUTX
IIURX
RX
TX
BCM (BODY CONTROL MODULE)
M4
REFER TO THE FOLLOWING.
M4 -ELECTRICAL UNITS
M7 W
M41 W
M42 W
M46 B
B29 GY

TKWA0600E

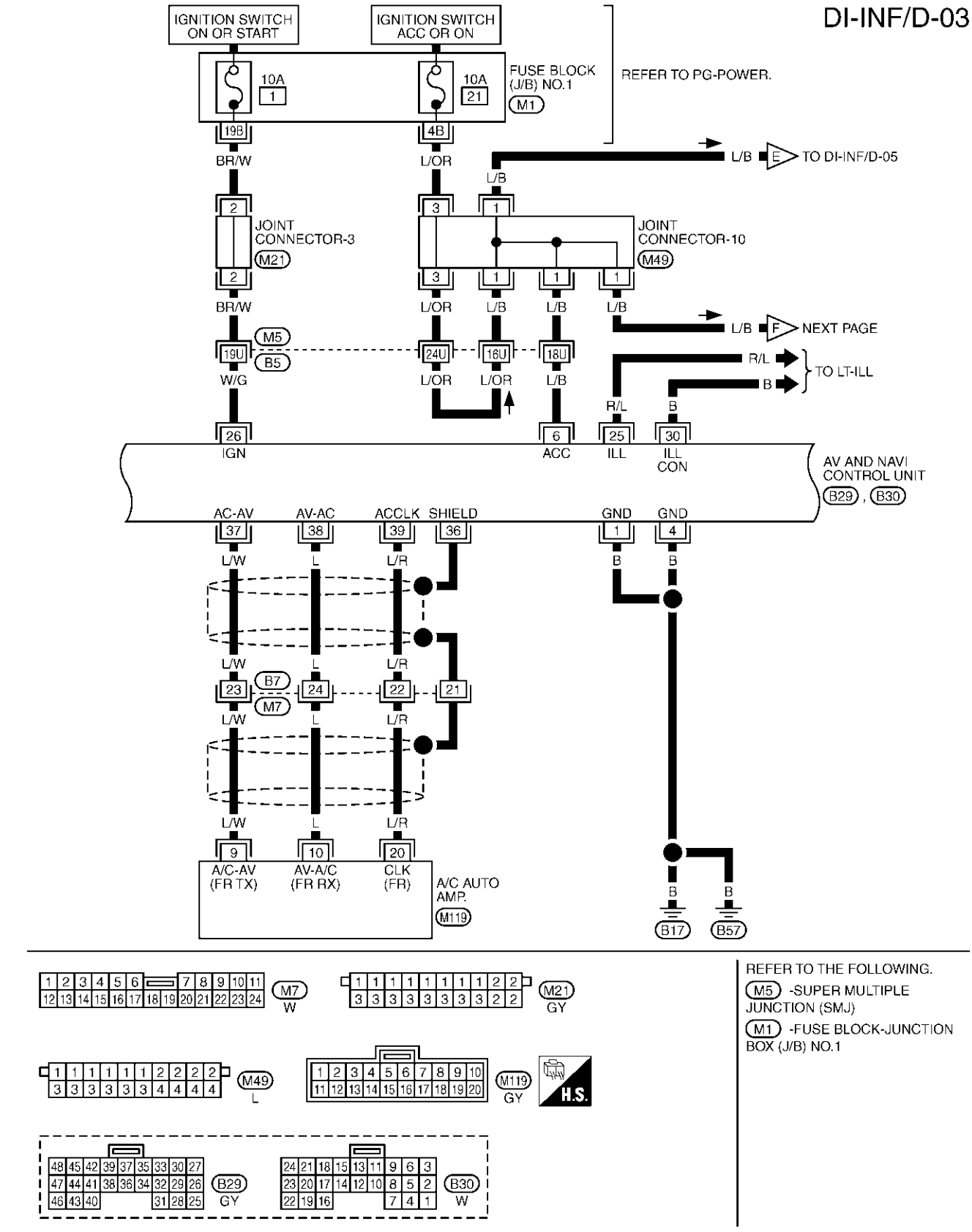
DI-INF/D-03
IGNITION SWITCH ON OR START
IGNITION SWITCH ACC OR ON
10A 1
10A 21
FUSE BLOCK (J/B) NO.1
M1
REFER TO PG-POWER.
19B
4B
BR/W
L/OR
L/B
E
TO DI-INF/D-05
JOINT CONNECTOR-3
M21
JOINT CONNECTOR-10
M49
BR/W
L/OR
L/B
L/B
L/B
F
NEXT PAGE
M5
B5
19U
24U
16U
18U
W/G
L/OR
L/OR
L/B
R/L
B
TO LT-ILL
R/L
B
26 IGN
6 ACC
25 ILL
30 ILL CON
AV AND NAVI CONTROL UNIT
B29, B30
AC-AV
AV-AC
ACCLK
SHIELD
GND
GND
37
38
39
36
1
4
L/W
L
L/R
B
B
B7
M7
23
24
22
21
9 A/C-AV (FR TX)
10 AV-A/C (FR RX)
20 CLK (FR)
A/C AUTO AMP.
M119
B17
B57
M7 W
M21 GY
M49 L
M119 GY
H.S.
B29 GY
B30 W
REFER TO THE FOLLOWING.
M5 -SUPER MULTIPLE JUNCTION (SMJ)
M1 -FUSE BLOCK-JUNCTION BOX (J/B) NO.1
TKWA0601E

DI-INF/D-04

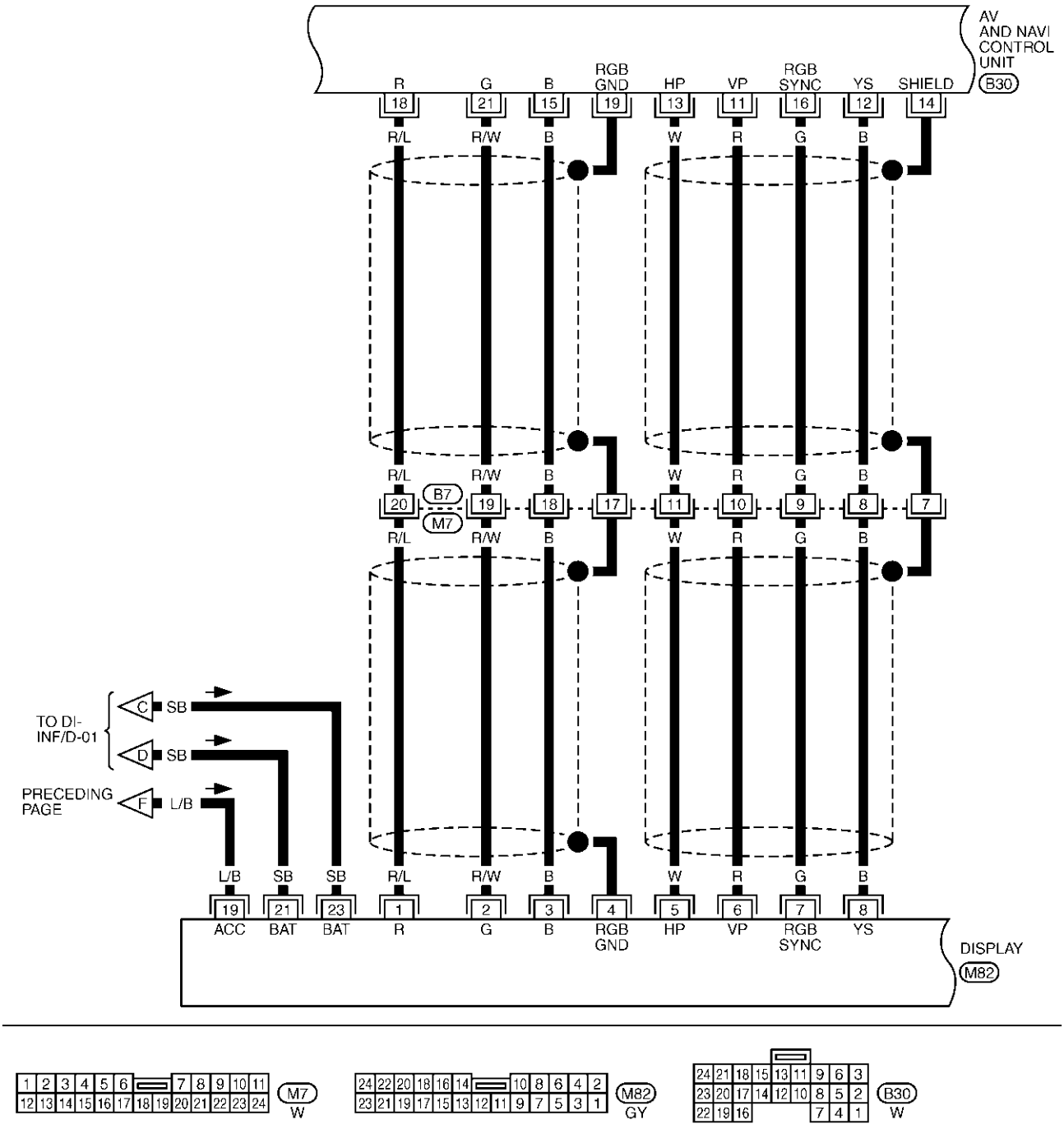

TKWA0602E

DI-INF/D-05

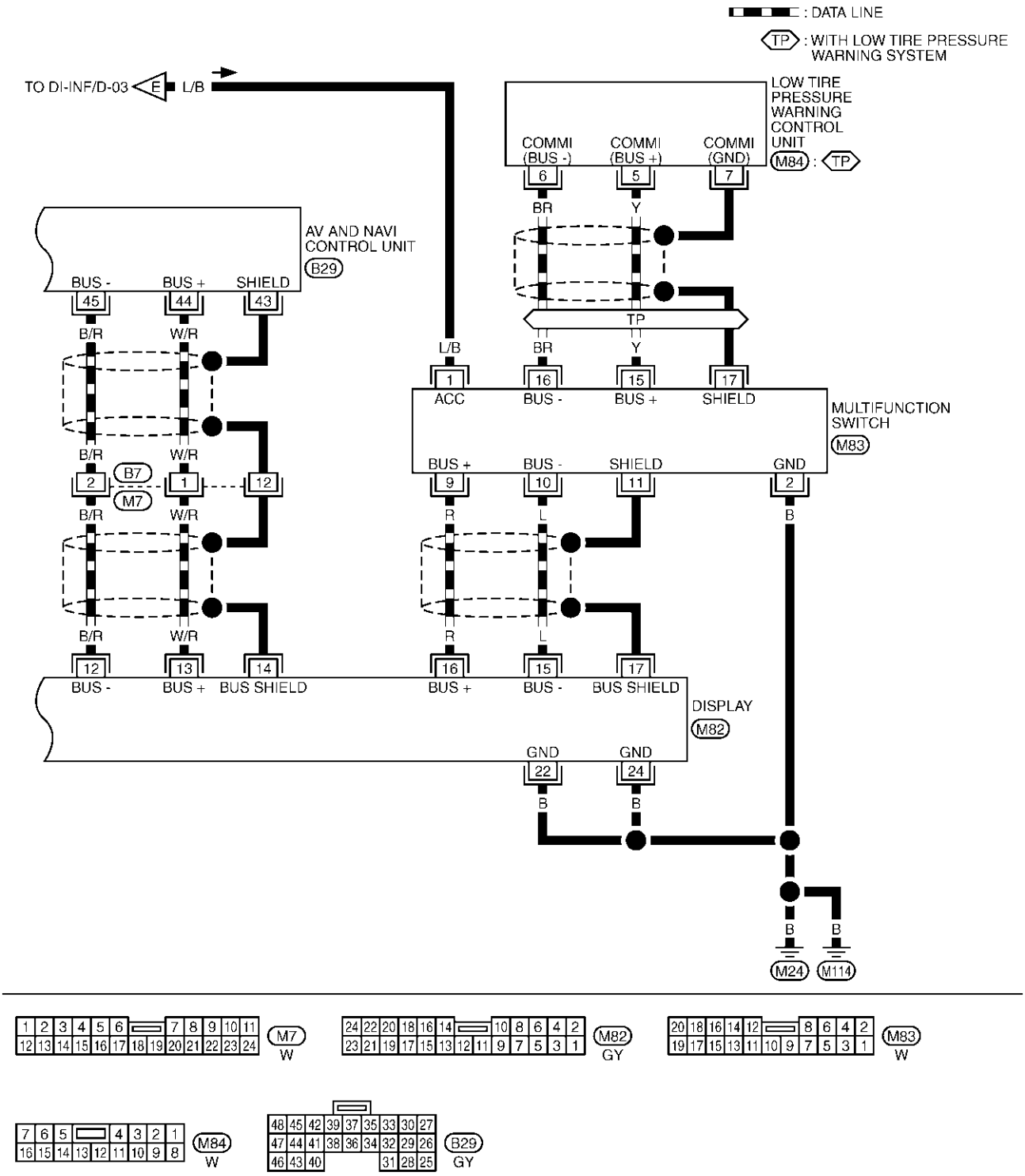
: DATA LINE
TP : WITH LOW TIRE PRESSURE WARNING SYSTEM
TO DI-INF/D-03
E
L/B
LOW TIRE PRESSURE WARNING CONTROL UNIT
M84 : TP
COMMI (BUS -)
COMMI (BUS +)
COMMI (GND)
6
5
7
BR
Y
TP
AV AND NAVI CONTROL UNIT
B29
BUS -
BUS +
SHIELD
45
44
43
B/R
W/R
L/B
1
16
15
17
ACC
BUS -
BUS +
SHIELD
MULTIFUNCTION SWITCH
M83
BUS +
BUS -
SHIELD
GND
2
9
10
11
2
B7
M7
1
12
R
L
B
12
13
14
16
15
17
BUS -
BUS +
BUS SHIELD
BUS +
BUS -
BUS SHIELD
DISPLAY
M82
GND
GND
22
24
M24
M114
M7
W
M82
GY
M83
W
M84
W
B29
GY
TKWA0603E

Terminals and Reference Value for AV and NAVI Control Unit

AKS004DQ

Refer to AV-63, "Terminals and Reference Value for AV and NAVI Control unit" .

Terminals and Reference Value for Display

AKS004DR

Terminals			Signal	Condition		Reference value
(+)		(–)				
Terminal No.	Wire color			Ignition switch	Operation	
1	R/L	Ground	RGB signal (R: Red)	ON	Move to “Screen Adjustment” in the check/adjustment function.	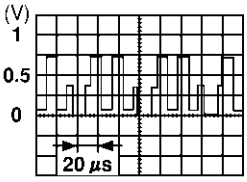 SKIA0165E
2	R/W	Ground	RGB signal (G: Green)	ON	Move to “Screen Adjustment” in the check/adjustment function.	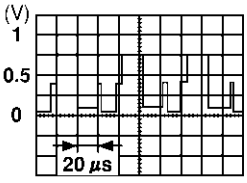 SKIA0166E
3	B	Ground	RGB signal (B: Blue)	ON	Move to “Screen Adjustment” in the check/adjustment function.	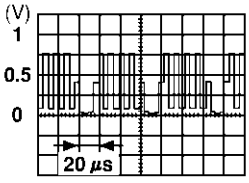 SKIA0167E
4	—	Ground	RGB ground	ON	—	Approx. 0V
5	W	Ground	Horizontal synchronizing signal	ON	ON screen, the volume can be adjusted.	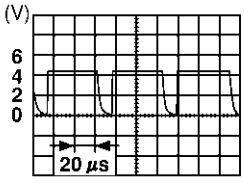 SKIA0163E
6	R	Ground	Vertical synchronizing signal	ON	—	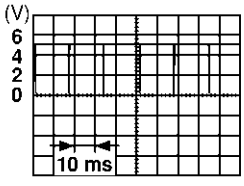 SKIA0161E
7	G	Ground	RGB synchronizing signal	ON	Press the map switch.	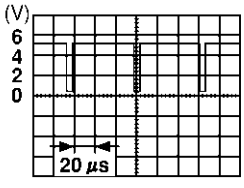 SKIA0164E

Terminals			Signal	Condition		Reference value
(+)		(–)				
Terminal No.	Wire color			Ignition switch	Operation	
8	B	Ground	RGB area signal	ON	Press the vehicle information switch.	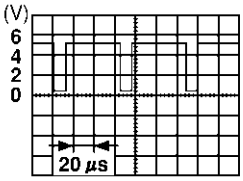 SKIA0162E
12	B/R	Ground	Communication signal (-)	ON	—	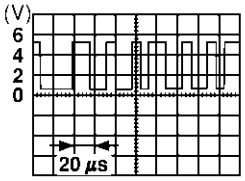 SKIA0176E
13	W/R	Ground	Communication signal (+)	ON	—	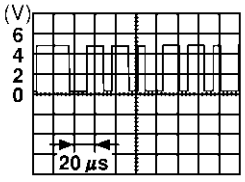 SKIA0175E
14	—	—	Shield ground	—	—	—
15	L	Ground	Communication signal (-)	ON	—	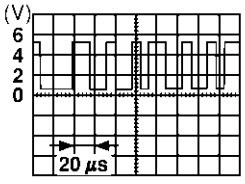 SKIA0176E
16	R	Ground	Communication signal (+)	ON	—	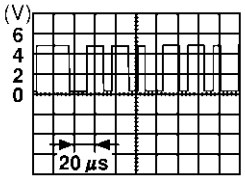 SKIA0175E
17	–	Ground	Shield ground	—	—	—
19	L/B	Ground	Ignition switch (ACC)	ACC	—	Battery voltage
21	SB	Ground	Battery power	OFF	—	Battery voltage
23	SB					
22	B	Ground	Ground	—	—	—
24	B					

Terminals and Reference Value for Multifunction Switch

AKS004DS

Terminals (+) Terminal No.	Terminals (+) Wire color	Terminals (–)	Signal	Condition: Ignition switch	Condition: Operation	Reference value
1	L/B	Ground	Ignition switch (ACC)	ACC	—	Battery voltage
2	B	Ground	Ground	ON	—	Approx. 0V
9	R	Ground	Communication signal (+)	ON	—	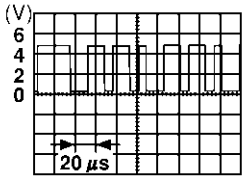 SKIA0175E
10	L	Ground	Communication signal (-)	ON	—	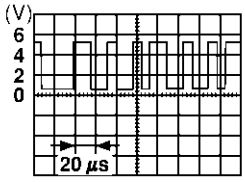 SKIA0176E
11	—	Ground	Shield ground	ON	—	—
15	Y	Ground	Communication signal (+)	ON	—	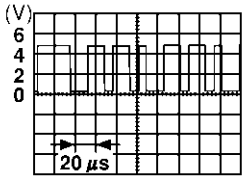 SKIA0175E
16	BR	Ground	Communication signal (-)	ON	—	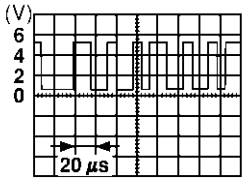 SKIA0176E
17	—	Ground	Shield ground	—	—	—

On Board Self-Diagnosis Function

AKS004DT

DESCRIPTION

- Diagnosis function consists of the self-diagnosis mode performed automatically and the CONFIRMATION/ADJUSTMENT mode operated manually.
- Self-diagnosis mode checks for connections between the units constituting this system, analyzes each individual unit at the same time, and displays the results on the LCD screen.
- CONFIRMATION/ADJUSTMENT mode is used to perform trouble diagnosis that require operation and judgment by an operator (trouble that cannot be automatically judged by the system), to check/change the set value, and to display the History of Errors of the navigation system.

DIAGNOSIS ITEM

Mode			Description
Self-diagnosis			● AV and NAVI Control unit diagnosis (DVD-ROM drive will not be diagnosed when no map DVD-ROM is in it.) ● Analyzes connection between the AV and NAVI control unit and the GPS antenna connection between the AV and NAVI control unit and each unit, and operation of each unit.
CONFIRMATION/ ADJUSTMENT	Display diagnosis		Color tone and shading of the screen can be checked by the display of a color bar and a gray scale.
	Vehicle signals		Analyzes the following vehicle signals: Vehicle speed signal, parking brake signal, light signal, ignition switch signal, and reverse signal.
	Speaker Test		Checks the connection of each speaker using a test tone.
	Auto Climate Control		Turns all A/C screens on display and A/C switch indicator lamp on.
	Navigation	Display Longitude & Latitude	Display the map.Use the joystick to adjust position. Longitude and latitude will be displayed.
		Speed Calibration	Under ordinary conditions, the navigation system distance measuring function will automatically compensate for minute decreases in wheel and tire diameter caused by tire wear or low pressure.Speed calibration immediately restores system accuracy in cases such as when distance calibration is needed because of the use of tire chains in inclement weather.
		Angle Adjustment	Corrects difference between actual turning angle of a vehicle and turning angle of the car mark on the display.
		Initialize Location	This mode is for initializing the current location. Use when the vehicle is transported a long distance on a trailer, etc.
	History of Errors		Diagnosis results previously stored in the memory (before turning ignition switch ON) are displayed in this mode. Time and location when/where the errors occurred are also displayed.
	Rear View Camera		Changes position of the aiming line overlapped on the rear view image.

Self-Diagnosis Mode

AKS004DU

Refer to AV-68, "Self-Diagnosis Mode" .

Confirmation/Adjustment Mode

AKS004DV

Refer to AV-72, "Confirmation/Adjustment Mode" .

CONSULT-II Function

AKS004DW

Refer to AV-78, "CONSULT-II Function" .

Multifunction Switch Self-Diagnosis Function

AKS004DX

It can check ON/OFF operation of each switch in the multifunction switch and diagnose the input signals to the rear control switch (audio) and steering switch (audio).

STARTING THE SELF-DIAGNOSIS MODE

1. Turn ignition switch from OFF to ACC.
2. Within 10 seconds press and hold the function switches “1” and “6 ”simultaneously for 5 seconds.

Then the self-diagnosis operates.

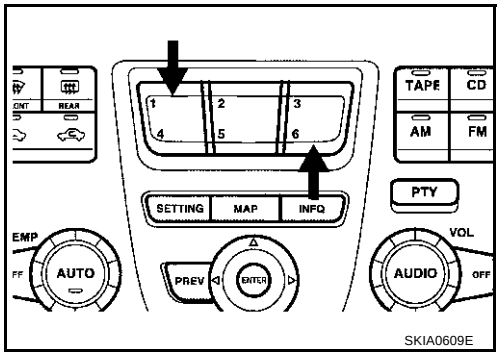

EXITING THE SELF-DIAGNOSIS MODE

- Turn ignition switch OFF, or press and hold the function switches “1” and “6” simultaneously for 5 seconds. Then the self-diagnosis ends.

DIAGNOSIS FUNCTION

- It can illuminate all the indicators (LED) in the multifunction switch.
- It can check for continuity of the switches by sounding the buzzer when the multifunction switch is pressed.
- It can check for continuity of harness between multifunction switch and rear control switch (audio), or steering switch (audio).

  NOTE:
  When it check continuity of harness between multifunction switch and rear control switch (audio), rear control cancel switch is OFF position.

Power Supply and Ground Circuit Check for AV and NAVI Control Unit

AKS004DY

Refer to AV-82, "Power Supply and Ground Circuit Check" .

Power Supply and Ground Circuit Inspection for Display

AKS004DZ

1. CHECK FUSES

Check 15A fuse [No. 52, located in fuse, fusible link and relay block (J/B)] is blown.

OK or NG

OK >> GO TO 2.
NG >> If fuse is blown, be sure to eliminate cause of malfunction before installing new fuse. Refer to PG-2, "POWER SUPPLY ROUTING" .

2. CHECK POWER SUPPLY CIRCUIT

1. Disconnect display connector.
2. Check voltage between display and ground.

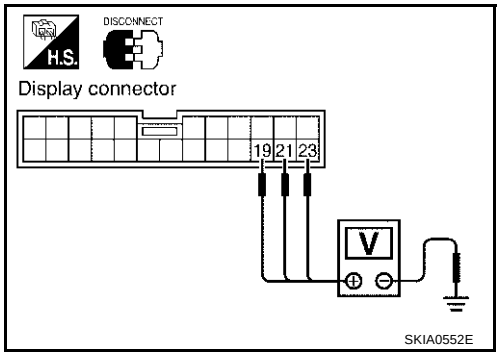

Terminals			Ignition switch position		
(+)		(–)	OFF	ACC	ON
Connector	Terminal (Wire color)				
M82	19 (L/B)	Ground	0V	Battery voltage	Battery voltage
	21 (SB)	Ground	Battery voltage	Battery voltage	Battery voltage
	23 (SB)	Ground	Battery voltage	Battery voltage	Battery voltage

OK or NG

OK >> GO TO 3.
NG >> Check harness for open or short between display and fuse.

3. CHECK GROUND CIRCUIT

1. Turn ignition switch OFF.
2. Check continuity between display and ground.

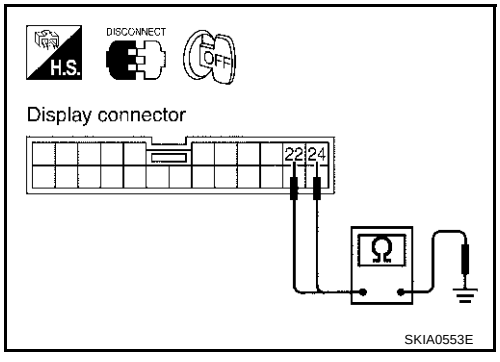

Terminals			Continuity
(+)		(–)	
Connector	Terminal (Wire color)		
M82	22 (B)	Ground	Yes
M82	24 (B)	Ground	Yes

OK or NG

OK >> Inspection end.
NG >> Repair harness or connector.

Power Supply and Ground Circuit Inspection for Multifunction Switch

AKS004E0

1. CHECK POWER SUPPLY CIRCUIT

1. Disconnect multifunction switch connector.
2. Check voltage between multifunction switch and ground.

Terminals			Ignition switch position		
(+)		(–)	OFF	ACC	ON
Connector	Terminal (Wire color)				
M83	1 (L/B)	Ground	0V	Battery voltage	Battery voltage

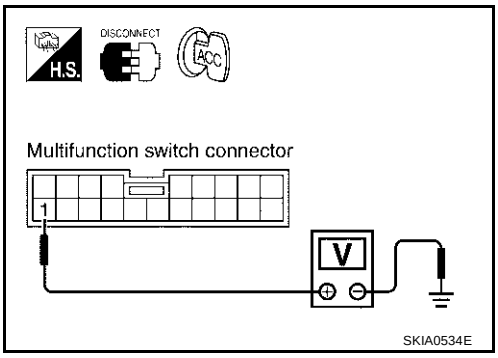

OK or NG

OK >> GO TO 2.
NG >> Check harness for open or short between multifunction switch and fuse.

2. CHECK GROUND CIRCUIT

1. Turn ignition switch OFF.
2. Check continuity between multifunction switch harness connector M83 terminal 2 (B) and ground.

Continuity should exist.

OK or NG

OK >> Inspection end.
NG >> Repair harness or connector.

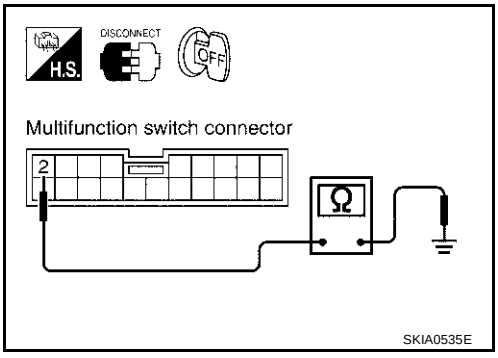

No Fuel Information Is Displayed/No Warning Message Is Displayed

AKS004E1

1. CHECK HARNESS

1. Disconnect connectors of combination meter, BCM, and AV and NAVI control unit.
2. Check continuity between AV and NAVI control unit and combination meter.

Terminals				Continuity
AV and NAVI control unit (+)		Combination meter (–)		
Connector	Terminal (Wire color)	Connector	Terminal (Wire color)	
B29	33 (LG)	M42	56 (LG)	Yes
B29	32 (PU)	M42	57 (PU)	Yes

3. Check continuity between AV and NAVI control unit and ground.

Terminals			Continuity
AV and NAVI control unit (+)		(–)	
Connector	Terminal (Wire color)		
B29	33 (LG)	Ground	No
	32 (PU)		

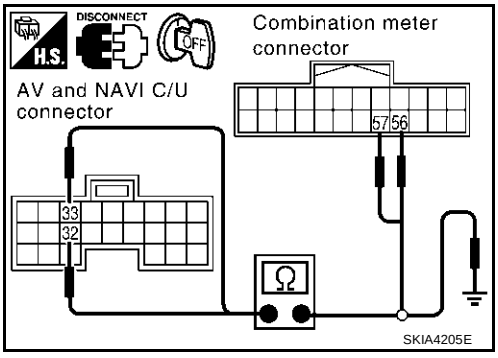

OK or NG

OK >> GO TO 2.
NG >> Repair harness or connector.

2. CHECK COMMUNICATION SIGNAL (AV-ME)

1. Connect connectors of combination meter, BCM, and AV and NAVI control unit.
2. Turn ignition switch ON.
3. Check the signal between AV and NAVI control unit harness connector B29 terminal 33 (LG) and ground with CONSULT-II or oscilloscope.

33 (LG) - Ground : **Refer to AV-63, "Terminals and Reference Value for AV and NAVI Control unit"** .

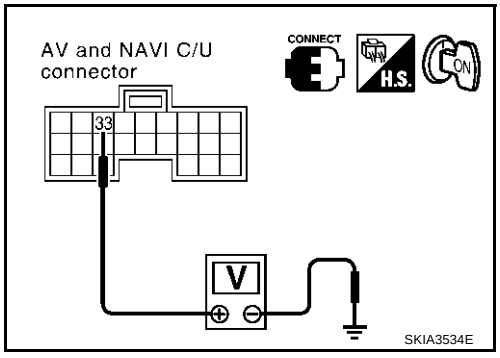

OK or NG

OK >> GO TO 3.
NG >> Replace AV and NAVI control unit.

3. CHECK COMMUNICATION SIGNAL (ME–AV)

1. Turn ignition switch to ON and display “VEHICLE ELECTRONIC SYSTEMS”screen.
2. Check voltage signal between AV and NAVI control unit harness connector B29 terminal 32 (PU) and ground with CONSULT-II or oscilloscope.

32 (PU) - Ground : **Refer to AV-63, "Terminals and Reference Value for AV and NAVI Control unit"** .

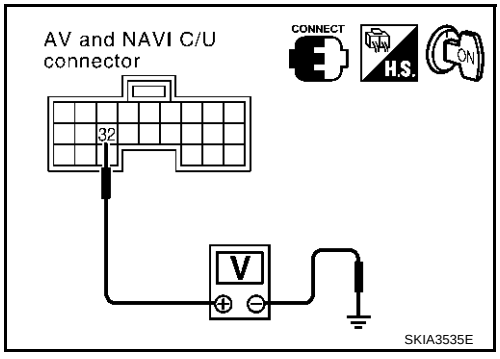

OK or NG

OK >> Replace AV and NAVI control unit.
NG >> Replace combination meter.

Vehicle Condition Setting Is Not Possible.

AKS004E2

1. CHECK HARNESS

1. Disconnect connectors of combination meter, BCM, and AV and NAVI control unit.
2. Check continuity AV and NAVI control unit and BCM.

Terminals				Continuity
AV and NAVI control unit (+)		BCM (–)		
Connector	Terminal (Wire color)	Connector	Terminal (Wire color)	
B29	33 (LG)	M4	31 (LG)	Yes
B29	32 (PU)	M4	30 (PU)	Yes

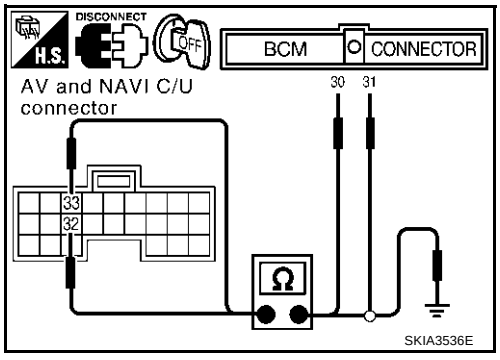

3. Check continuity between AV and NAVI control unit and ground.

Terminals			Continuity
AV and NAVI control unit (+)		(–)	
Connector	Terminal (Wire color)		
B29	33 (LG)	Ground	No
	32 (PU)		

OK or NG

OK >> GO TO 2.
NG >> Repair harness or connector.

2. CHECK COMMUNICATION SIGNAL (AV–ME)

1. Connect connectors of combination meter, BCM, and AV and NAVI control unit.
2. Turn ignition switch ON.
3. Check voltage signal between AV and NAVI control unit harness connector B29 terminal 33 (LG) and ground with CONSULT-II or oscilloscope.

33 (LG) - Ground : **Refer to AV-63, "Terminals and Reference Value for AV and NAVI Control unit"** .

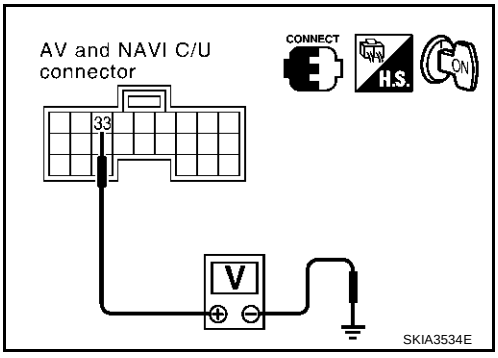

OK or NG

OK >> GO TO 3.
NG >> Replace AV and NAVI control unit.

3. CHECK COMMUNICATION SIGNAL (ME–AV)

1. Turn ignition switch ON and display “VEHICLE ELECTRONIC SYSTEMS” screen.
2. Check voltage signal between AV and NAVI control unit harness connector B29 terminal 32 (PU) and ground with CONSULT-II or oscilloscope.

32 (PU) - Ground : **Refer to AV-63, "Terminals and Reference Value for AV and NAVI Control unit"** .

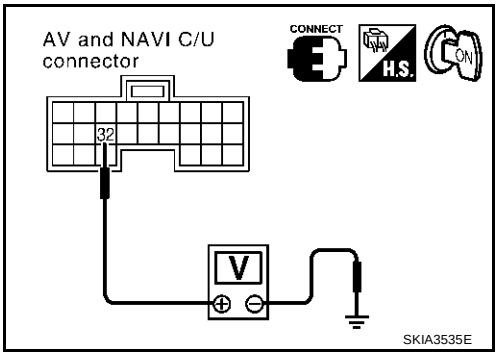

OK or NG

OK >> Replace AV and NAVI control unit.
NG >> Replace BCM.

Multifunction Switch Does Not Operate

AKS004E3

1. MULTIFUNCTION SWITCH SELF-DIAGNOSIS

Perform multifunction switch self-diagnosis. Refer to DI-90, "Multifunction Switch Self-Diagnosis Function" .

Is self-diagnosis result OK?

OK >> GO TO 2.
NG >> Replace multifunction switch.

2. CHECK POWER AND GROUND CIRCUIT

Check power and ground circuit. Refer to DI-89, "Terminals and Reference Value for Multifunction Switch" .

OK or NG

OK >> GO TO 3.
NG >> Repair harness or connector.

3. COMMUNICATION CIRCUIT SELF-DIAGNOSIS

Perform the self-diagnosis mode in the self-diagnosis function (If the self-diagnosis cannot be activated with the multifunction switch, check with CONSULT-II). Refer to AV-68, "Self-Diagnosis Mode" .

Is self-diagnosis result OK?

OK >> Replace display.
NG >> With the self-diagnostic results, check the malfunction part.

Multifunction Switch Indicator Does Not illuminate

AKS004E4

1. MULTIFUNCTION SWITCH SELF-DIAGNOSIS

Perform the multifunction switch self-diagnosis. Refer to DI-90, "Multifunction Switch Self-Diagnosis Function".

Is the self-diagnosis result OK?

OK >> Replace switch of the malfunctioning indicator.
NG >> Replace multifunction switch.

Removal and Installation of Display

AKS004E5

REMOVAL

1. Remove the cluster lid C. Refer to IP-10, "INSTRUMENT PANEL ASSEMBLY"
2. Remove the screws (4), and remove the display.

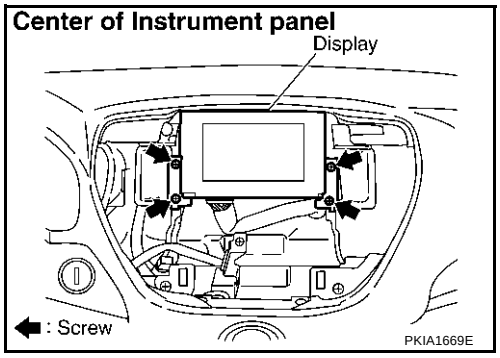

3. Remove screws (4), and remove bracket.

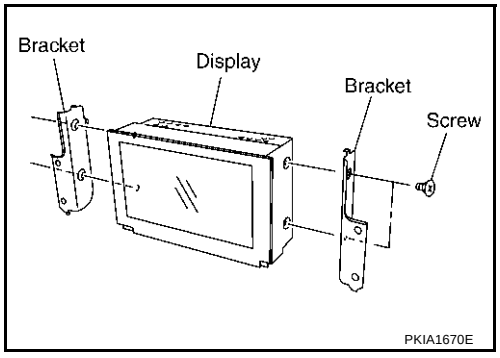

INSTALLATION

Install in the reverse order of removal.

Disassembly and Assembly for Multifunction Switch

AKS004E6

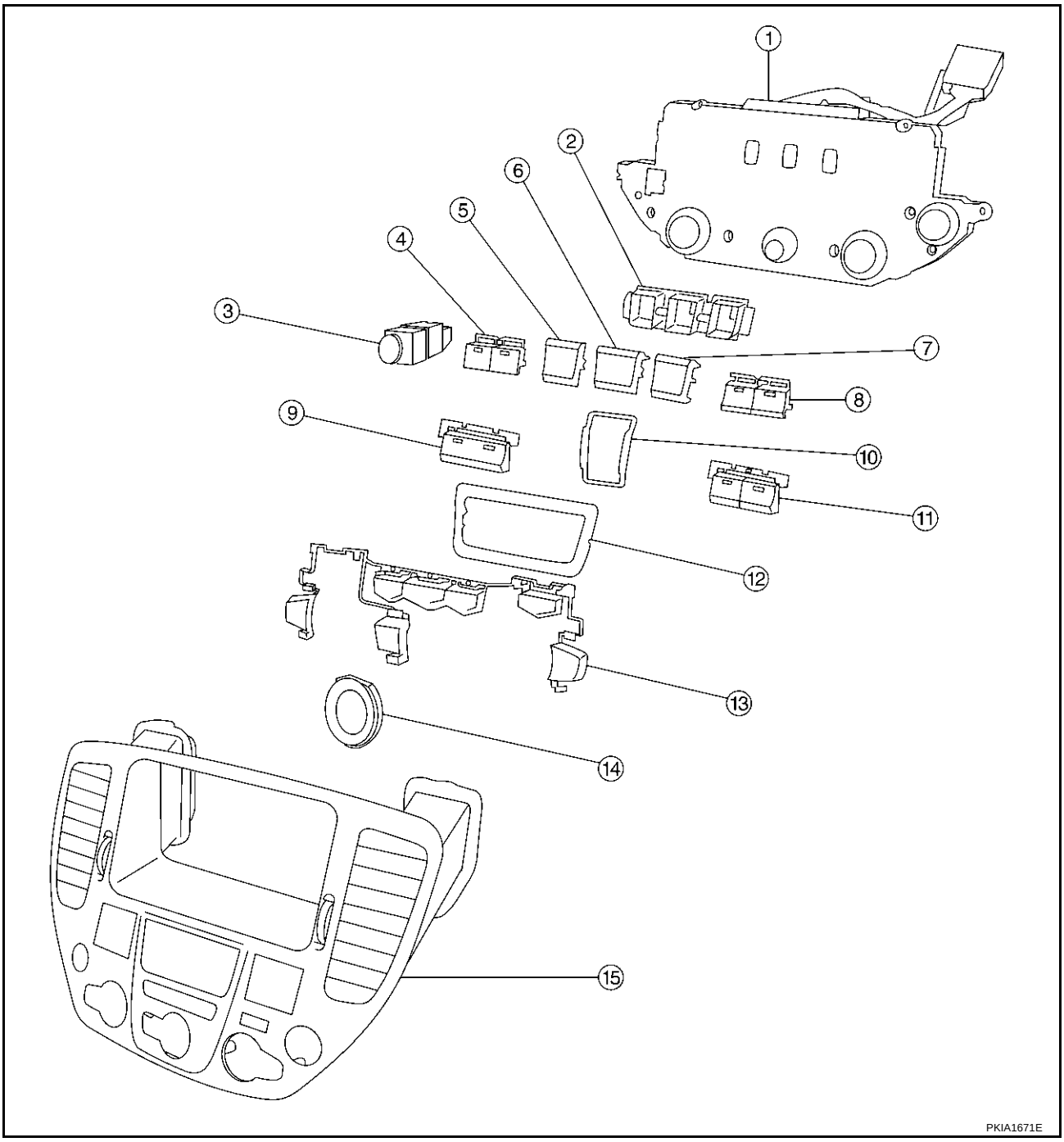

1. Multifunction switch	2. Escutcheon	3. Hazard switch
4. Defroster, rear defogger switch	5. Function switch	6. Function switch
7. Function switch	8. TAPE and DISC switch	9. A/C switch
10. Escutcheon	11. AM and FM switch	12. Escutcheon
13. Switch assembly	14. Escutcheon	15. Cluster lid C

1. Remove the screw (8)
2. Remove the switches.

Removal and Installation of AV and NAVI Control Unit

AKS004E7

REMOVAL

1. Remove the trunk front finisher. Refer to EI-41, "TRUNK ROOM TRIM & TRUNK LID FINISHER" .
2. Remove the screws (4) and remove the AV and NAVI control unit.

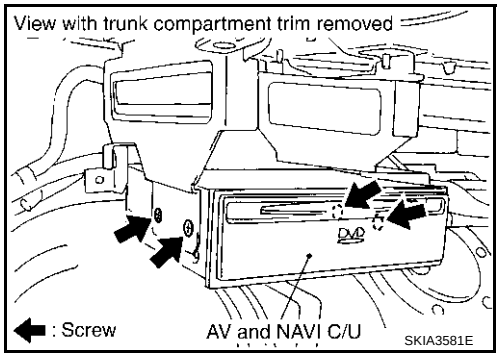

INSTALLATION

Install in the reverse order of removal.

VEHICLE INFORMATION AND INTEGRATED SWITCH SYSTEM /WITHOUT NAVIGATION SYSTEM

PFP:28395

System Description

AKS004OH

INTEGRATED SWITCH SYSTEM

Using the multifunction switch at the center of the instrument panel, the controls of the following systems are centralized:

- Auto A/C system
- Vehicle information system
- Audio system
- Hazard switch

The multifunction switch can operate and check the vehicle condition and each setting (vehicle electrical system).

PRECAUTION OF LCD MONITOR

- When passenger compartment temperature is low, the LCD monitor sometimes dims because of the brightness of the back light (small fluorescent light) integrated into the LCD monitor decrease. In this case, the refreshing rate of the picture also becomes low because of the low response of the LCD monitor. When passenger compartment becomes warm, however, the LCD recovers the normal display.
- Sometimes, black or bright dots peculiar to LCD monitor can be seen on the display.
- Back light sometimes flickers or darkens according to the total consumption hours and the number of ON and OFF switching. In this case, the back light should be replaced. (LCD monitor assembly).

POWER SUPPLY AND GROUND

Power Is Supplied At All Times

- through 15A fuse [No. 52, located in fuse, fusible link and relay block (J/B)]
- to AV control unit terminals 2 and 3, and
- to display terminals 21 and 23.

When Ignition Switch is in ACC or ON Position, Power is Supplied

- through 10A fuse [No. 21, located in fuse block (J/B) NO. 1]
- to AV control unit terminal 6
- to display terminal 19, and
- to multifunction switch terminal 1.

When Ignition Switch is in ON or START Position, Power is Supplied

- through 10A fuse [No. 1, located in fuse block (J/B) NO. 1]
- to AV control unit terminal 27.

Ground is Supplied

- to AV control unit terminals 1 and 4
- through body grounds M25 and M115, and
- to multifunction switch terminal 2 and
- to display terminals 22 and 24
- through grounds M24 and M114.

AV COMMUNICATION LINE

AV control unit is connected to the following units by AV communication line. Each unit transmits/receives data with AV communication line.

- Display
- Multifunction switch
- Audio unit
- BOSE speaker amp.(audio amp.)
- Rear view camera control unit
- Low tire pressure warning control unit

- Voice activated control module

VEHICLE INFORMATION SYSTEM

- AV control unit is received vehicle information system of signals from combination meter.
- AV control unit is communicating with BCM and combination meter.

1. Press “INFO” switch to display vehicle information display.

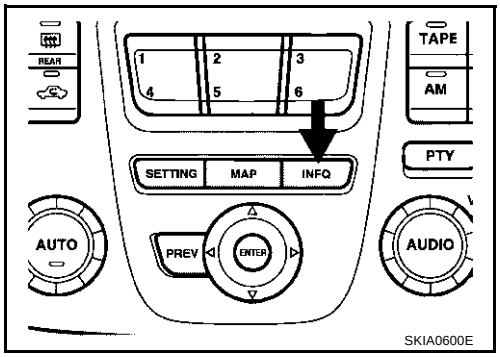

2. Select “Trip Computer”, “Fuel Economy”, “Maintenance” or “Tire Pressure”.

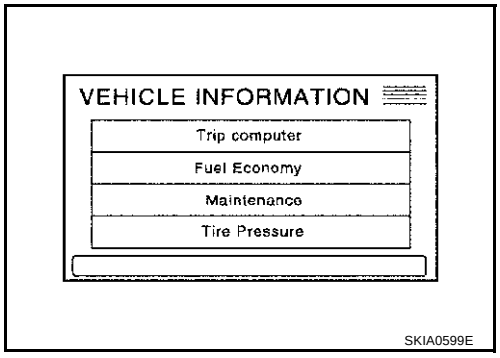

Display items	Display/Setting contents
Trip Computer	Elapsed time
	Driving distance
	Average speed
Fuel Economy	Average fuel economy (MPG)
	Distance to empty (Miles)
	Fuel economy (MPG)
	Fuel economy record
Maintenance (with Maintenance information*)	Maintenance intervals of engine oil and setting of oil change cycle
	Maintenance intervals of oil filter and setting of filter replacement cycle
	Maintenance intervals of tire and setting of tire replacement cycle
Tire Pressure	Tire pressure information

*: Maintenance information displays the change cycle of engine oil, oil filter and tire on LCD monitor depending on the driving distance specified by a driver or a technician.

Trip Computer Information

1. Select “Trip Computer”.
2. Elapsed Time, Driving Distance and Average Speed are displayed as Trip Computer information.

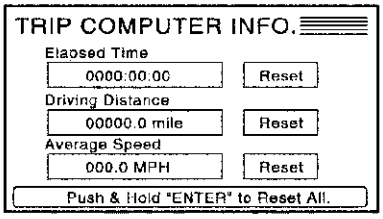

SKIA0601E

Fuel Economy Information

1. Select “Fuel Economy”.
2. Average Fuel Economy, Distance to Empty, Fuel Economy are displayed as Fuel Economy information.

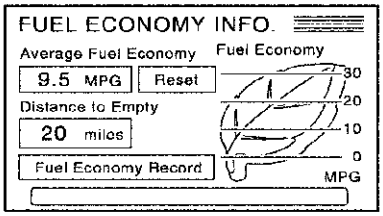

SKIA0602E

3. Select “Fuel Economy Record”. The average fuel consumption history will be displayed in graph along with the average for the previous Reset – to – Reset period.

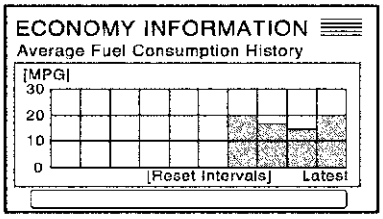

SKIA0603E

Maintenance Information

1. Select “Maintenance”.
2. Engine Oil, Oil Filter and Tire Rotation are displayed as Maintenance information.

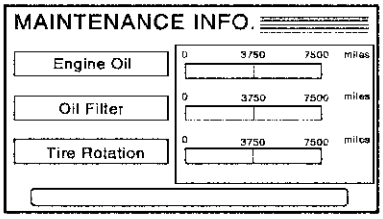

SKIA0604E

Tire Pressure Information

1. Select “Tire Pressure”.
2. Tire pressure displayed as Tire Pressure information.

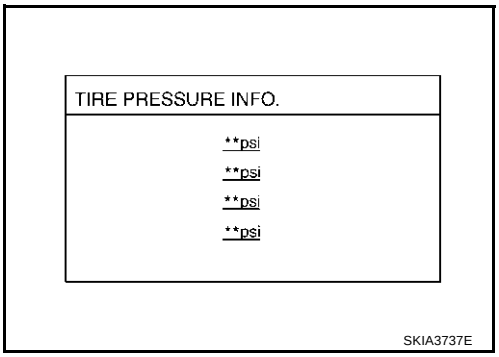

NOTE:

- When air pressure becomes 180kPa (1.8kg/cm^2 , 26psi) or less, “LOW PRESSURE” warning is indicated.
- When air pressure becomes 70kPa (0.7kg/cm^2 , 10psi) or less, “FLAT TIRE” warning is indicated.
- When pressure is not detected or tire pressure system has malfunction “** psi” is indicated.
- Indication with yellow frame for the malfunctioning tire.

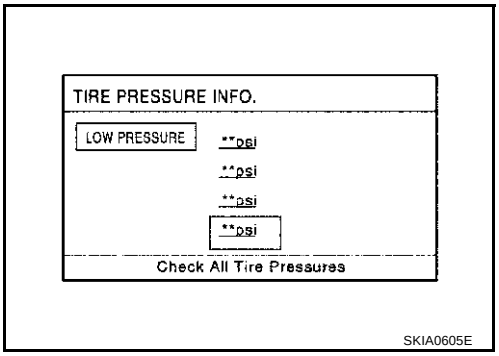

SETTING OF VEHICLE STATUS

- Setting of electric status can be changed by multifunction switch.The signal is sent to BCM through AV control unit to change vehicle electric system setting.
- AV control unit is communicating with BCM and combination meter.

1. Press “SETTING” switch to display vehicle information display.

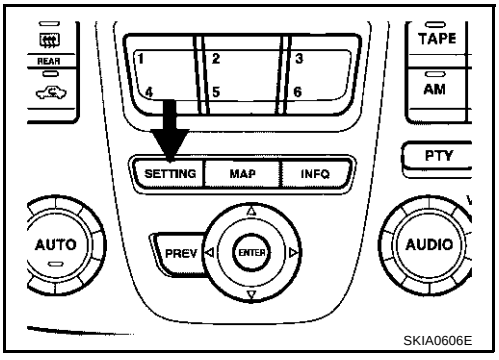

2. Select “Vehicle Electronic System”.

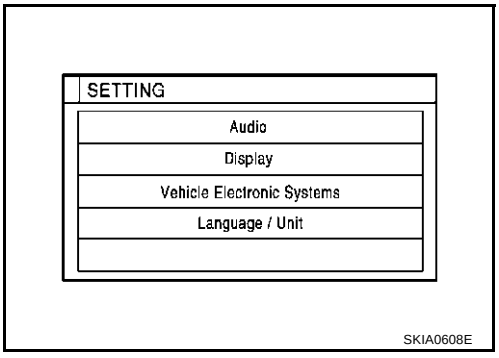

3. Select a vehicle status shown on the display.

Adjustable vehicle status

- Lift Steering Column When Exiting Vehicle
- Adjust Driver Seat When Exiting Vehicle
- Illuminate Interior When Unlocking Vehicle
- Interior Lights Off Delay

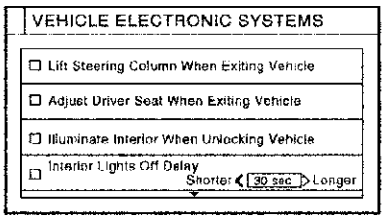

SKIA0610E

- Sensitivity of Automatic Headlights
- Automatic Headlights Off Delay
- Key Remote Response - Horn/Lights
- Remote Custom Settings

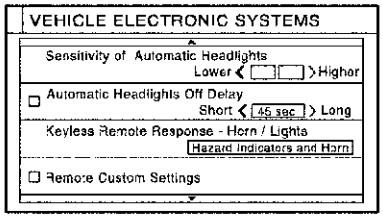

SKIA0611E

- Return All Settings to Default

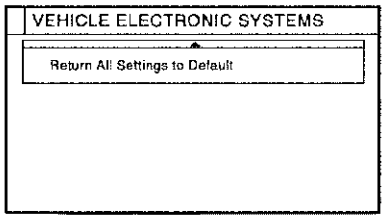

SKIA0612E

Adjustable vehicle status

Setting items	Setting variations	Initial setting	Operation
Lift Steering Column When Exiting Vehicle	ON/OFF	ON	The steering column automatically tilts up when the driver gets out, and returns to the original position when the driver gets on. ● When driver door is closed and key removed from ignition key cylinder, the steering column tilts up. ● When driver door is open and key is turned to OFF, the steering column tilts up.
Adjust Driver Seat When Exiting Vehicle	ON/OFF	ON	The driver's seat automatically slides backward when the driver gets out, and returns to the original position when the driver gets on.
Illuminate Interior When Unlocking Vehicle	ON/OFF	ON	The interior room lamps are illuminate automatically when the door unlocked with key or key fob.
Interior Lights Off Delay	OFF/15/30/45 sec.	30 sec.	Interior room lamp timer period can be changed in this mode. Selects interior room lamp timer.
Sensitivity of Automatic Headlights	1/2/3/4	3	Sensitivity of auto light sensor can be adjusted.
Automatic Headlights Off Delay	OFF/20/45/90/120/150/180 sec.	45 sec.	Auto light delay off timer period can be changed in this mode. Selects auto light delay off timer.
Key Remote Response - Horn/Lights	Hazard indicators only /Hazard indicators and horn	Hazard indicators only	Hazard indicators Only: ● Lock operation: The hazard warning lamp flash twice when lock the doors with key fob. ● Unlock operation: No response. Hazard indicators and horn: ● Lock operation: The hazard warning lamp flash twice and horn sounds once when lock the doors with key fob. ● Unlock operation; The hazard warning lamp flash once when unlock the doors with key fob.
Remote Custom Settings	ON/OFF	ON	The driving position -seat and steering column- and the audio setting -current source and radio station presets- are set to the same condition you made last time by identifying the key fob ID. This function operates when unlock the doors by using the key fob. **NOTE:** It is necessary to memorize the driving position before using this function.
Return All Settings to Default	None	None	If this key is selected, all vehicle electronic systems setting are return to default.

WARNING INDICATIONS

When combination meter receives warning signal from some control units or sensors, then combination meter warning lamp is illuminated.
Then combination meter sends warning signal to AV control unit to display warning indications on the screen.

Warning indicators	Warning lamps in instrument panel	Warning detection and cancel conditions		Cases of malfunction
MALFUNCTION	SERVICE ENGINE SOON	Detection condition	Warning lamp ON signal is detected while engine is running.	ECM malfunction
		Cancel condition	Warning lamp OFF signal is detected.	
ENGINE OIL PRESSURE	Engine oil pressure	Detection condition	Warning lamp ON signal is detected for at least approx. 5 seconds while engine is running. [Engine oil pressure: MAX. approx. 29kPa (0.3kg/cm^2 , 4psi)]	Engine oil pressure decreases
		Cancel condition	Warning lamp OFF signal is detected. [Engine oil pressure: MIN. approx. 29kPa (0.3kg/cm^2 , 4psi)]	
SUPPLEMENTAL AIR BAG	Air bag	Detection condition	Warning lamp ON signal is detected for at least approx. 10 seconds after ignition switch is turned ON.	SRS air bag system malfunction
		Cancel condition	Warning lamp OFF signal is detected.	
LOW BRAKE FLUID	Brake	Detection condition	Warning lamp ON signal (fluid level) is detected.	Low brake fluid level
		Cancel condition	Warning lamp OFF signal is detected.	
OVERHEATING	–	Detection condition	Engine coolant temperature as being approx. 119°C (246°F) min.	Engine cooling system malfunction
		Cancel condition	Engine coolant temperature as being approx. 105°C (221°F) max.	
CHARGE	Charge	Detection condition	Warning lamp ON signal is detected while engine is running. Charging system malfunction	Charging system malfunction
		Cancel condition	Warning lamp OFF signal is detected.	
LOW WASHER FLUID	–	Detection condition	Washer liquid level falls below approx. 0.4 ℓ.(7/8US qt, 3/4Imp pt)	Low washer liquid level
		Cancel condition	Except above condition.	
LOW FUEL	Fuel level	Detection condition	After warning lamp ON signal is detected, vehicle is driven for over specified distance. (Fuel level: Approx. 14.0 ℓ 14-3/4US qt,12-3/8Imp pt)	Low fuel level
		Cancel condition	Warning lamp OFF signal is detected.	
PARKING BRAKE	Brake	Detection condition	Parking brake ON signal is detected while vehicle is running [approx. 5km/h (3MPH) or faster].	Parking brake remains engaged.
		Cancel condition	Vehicle is stopped, or parking brake OFF signal is detected.	

Warning indicators	Warning lamps in instrument panel	Warning detection and cancel conditions		Cases of malfunction
DOOR OPEN	Door	Detection condition	Vehicle is running [approx. 5km/h (3MPH) or faster] and door ajar of any of the doors is detected.	Door is open
		Cancel condition	Vehicle is stopped and all the doors lock.	
ANTI-LOCK BRAKE	ABS	Detection condition	Warning lamp ON signal is detected when engine is running.	ABS control system malfunction
		Cancel condition	Warning lamp OFF signal is detected.	
VEHICLE DYNAMIC CONTROL	VDC	Detection condition	Warning lamp ON signal is detected when engine is running.	VDC system malfunction
		Cancel condition	Warning lamp OFF signal is detected.	
TRACTION CONTROL SYSTEM	TCS	Detection condition	Warning lamp ON signal is detected when engine is running.	TCS system malfunction
		Cancel condition	Warning lamp OFF signal is detected.	
AUTOMATIC TRANSMISSION OIL TEMPERATURE	AT CHECK	Detection condition	Warning lamp ON signal is detected after ignition switch is turned ON.	TCM system malfunction
		Cancel condition	Warning lamp OFF signal is detected.	
TIRE PRESSURE	Tire Pressure	Detection condition	Warning lamp ON signal is detected after ignition switch is turned ON.	Low tire pressure warning control unit system malfunction
		Cancel condition	Warning lamp OFF signal is detected.	
LOW TIRE PRESSURE (TIRE PRESSURE INFO.)		Detection condition	Tire pressure 180kPa (1.8kg/cm^2 , 26psi) is detected while vehicle is running.	Tire pressure is low
		Cancel condition	Except above condition.	
FLAT TIRE (TIRE PRESSURE INFO.)		Detection condition	Tire pressure 70kPa (0.7kg/cm^2 , 10psi) is detected while vehicle is running.	Flat tire
		Cancel condition	Except above condition.	
CRUISE CONTROL	SET	Detection condition	Warning lamp ON signal is detected after ignition switch is turned ON.	ASCD system malfunction
		Cancel condition	Warning lamp OFF signal is detected.	

Precautions for AV Control Unit Replacement

AKS003ZR

The AV control unit has the following information stored in its memory. Record the memory contents before replacing the control unit, and input them in the new unit as necessary.

<FM·AM>	• **Preset frequency**
	• **Area for indicating station, selection of overlapped stations**
<CD>	• **Program status**
<Sound quality>	• **Volume balance memory set values**
	• **Equalizer memory set values**
<Image quality>	• **Brightness of light when ON/OFF**
	• **Dimming switching**
	• **Display color switching**

NOTE:
Only removing the battery does not erase the memory.

Component Parts and Harness Connector Location

AKS003ZS

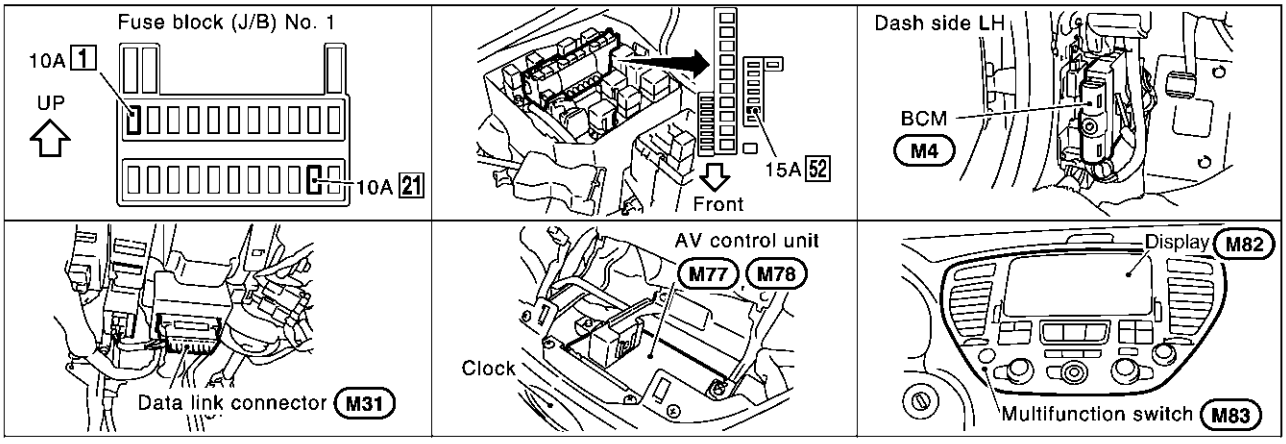

SKIA9346E

Schematic

AKS003ZT

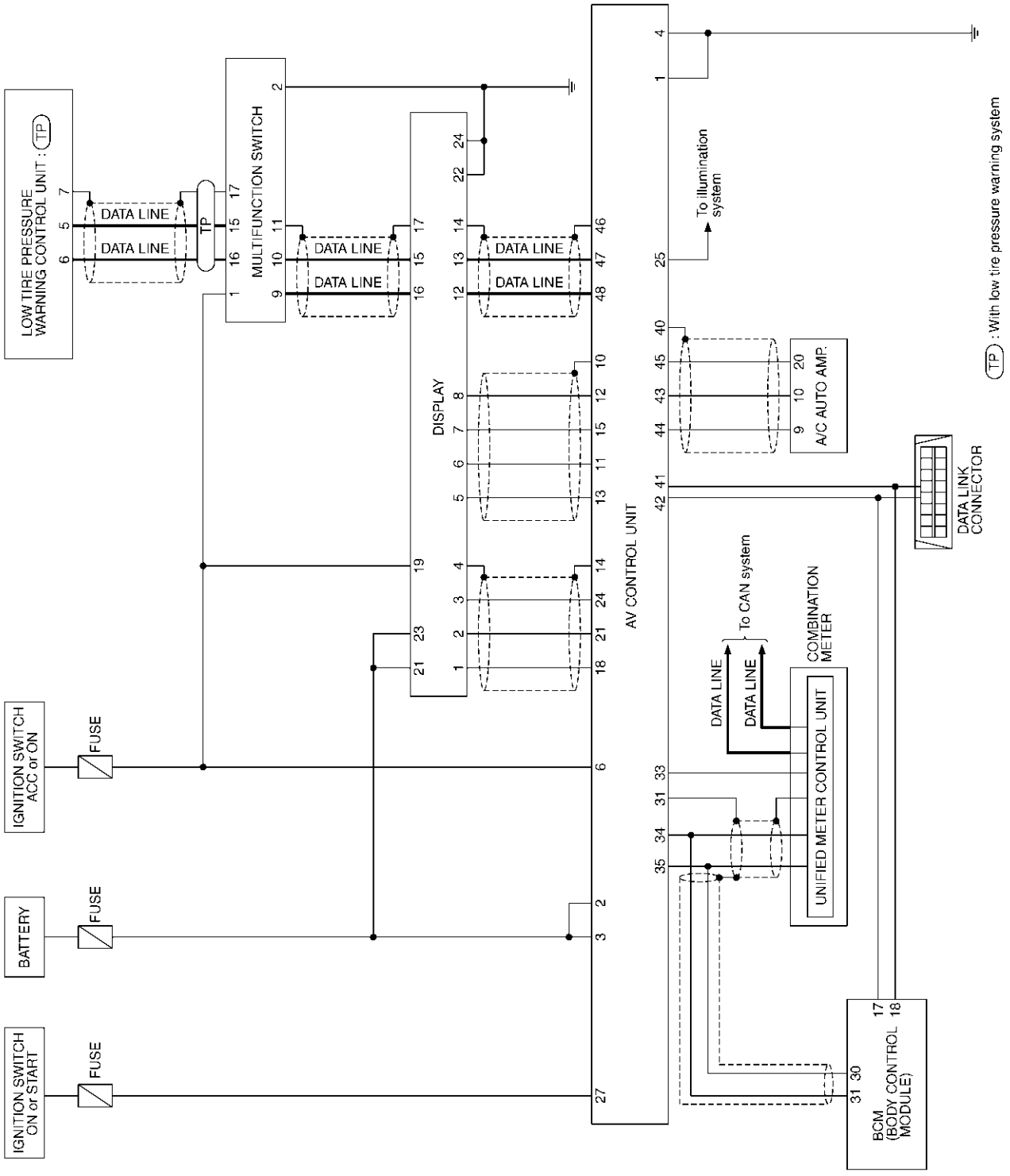

TKWA0604E

Wiring Diagram — INF/D —

AKS003ZU

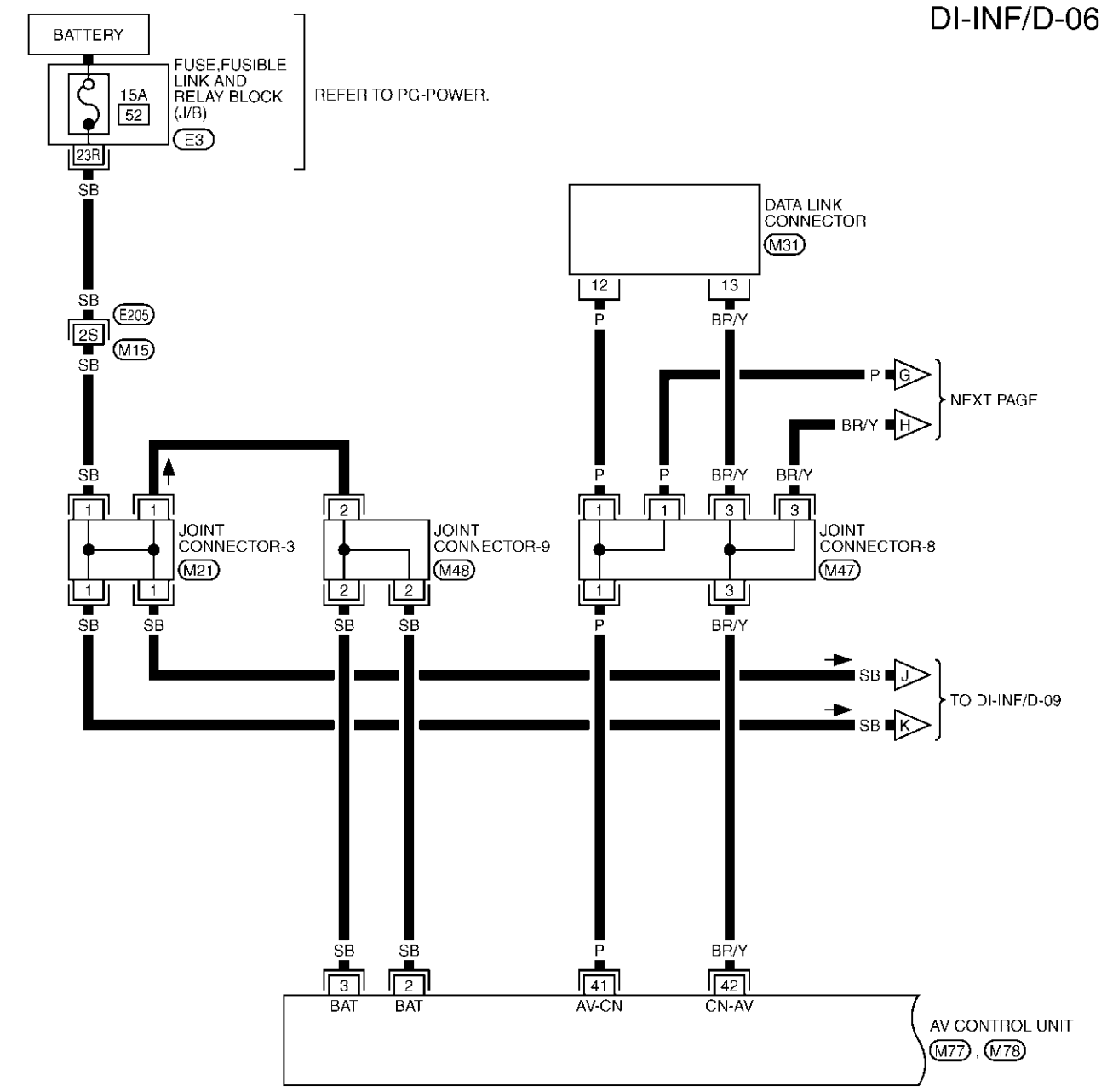

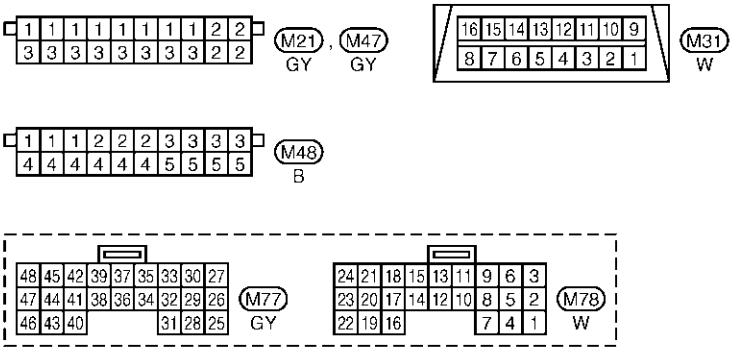

REFER TO THE FOLLOWING.

E205 -SUPER MULTIPLE JUNCTION (SMJ)

E3 -FUSE,FUSIBLE LINK AND RELAY BLOCK (J/B)

TKWA0605E

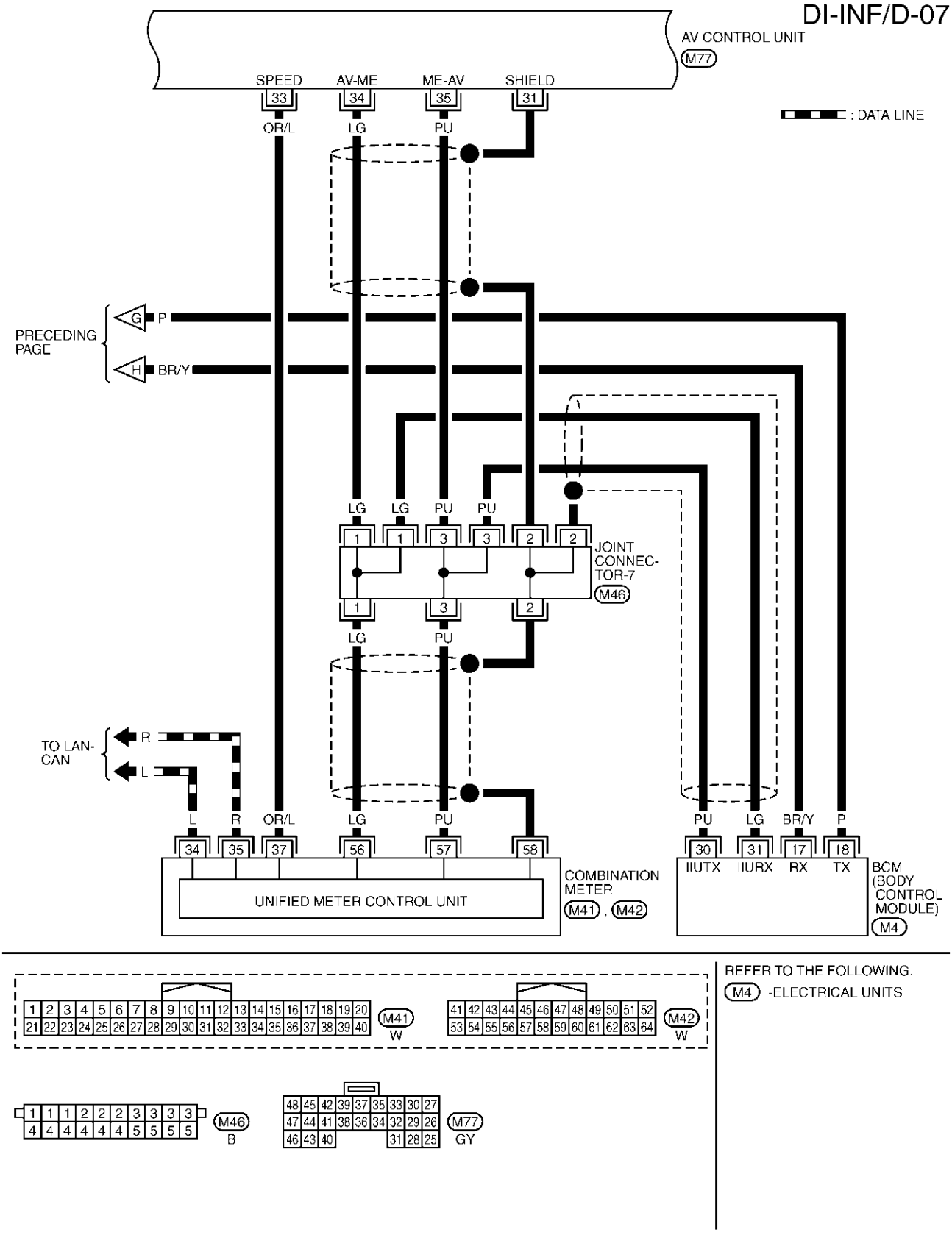
DI-INF/D-07
AV CONTROL UNIT
M77
SPEED
AV-ME
ME-AV
SHIELD
33
34
35
31
OR/L
LG
PU
: DATA LINE
PRECEDING PAGE
G
P
H
BR/Y
LG
LG
PU
PU
1
1
3
3
2
2
JOINT CONNEC-TOR-7
M46
1
3
2
LG
PU
TO LAN-CAN
R
L
L
R
OR/L
LG
PU
PU
LG
BR/Y
P
34
35
37
56
57
58
30
31
17
18
IIUTX
IIURX
RX
TX
UNIFIED METER CONTROL UNIT
COMBINATION METER
M41 , M42
BCM (BODY CONTROL MODULE)
M4
M41
W
M42
W
M46
B
M77
GY
REFER TO THE FOLLOWING.
M4 -ELECTRICAL UNITS
TKWA0606E

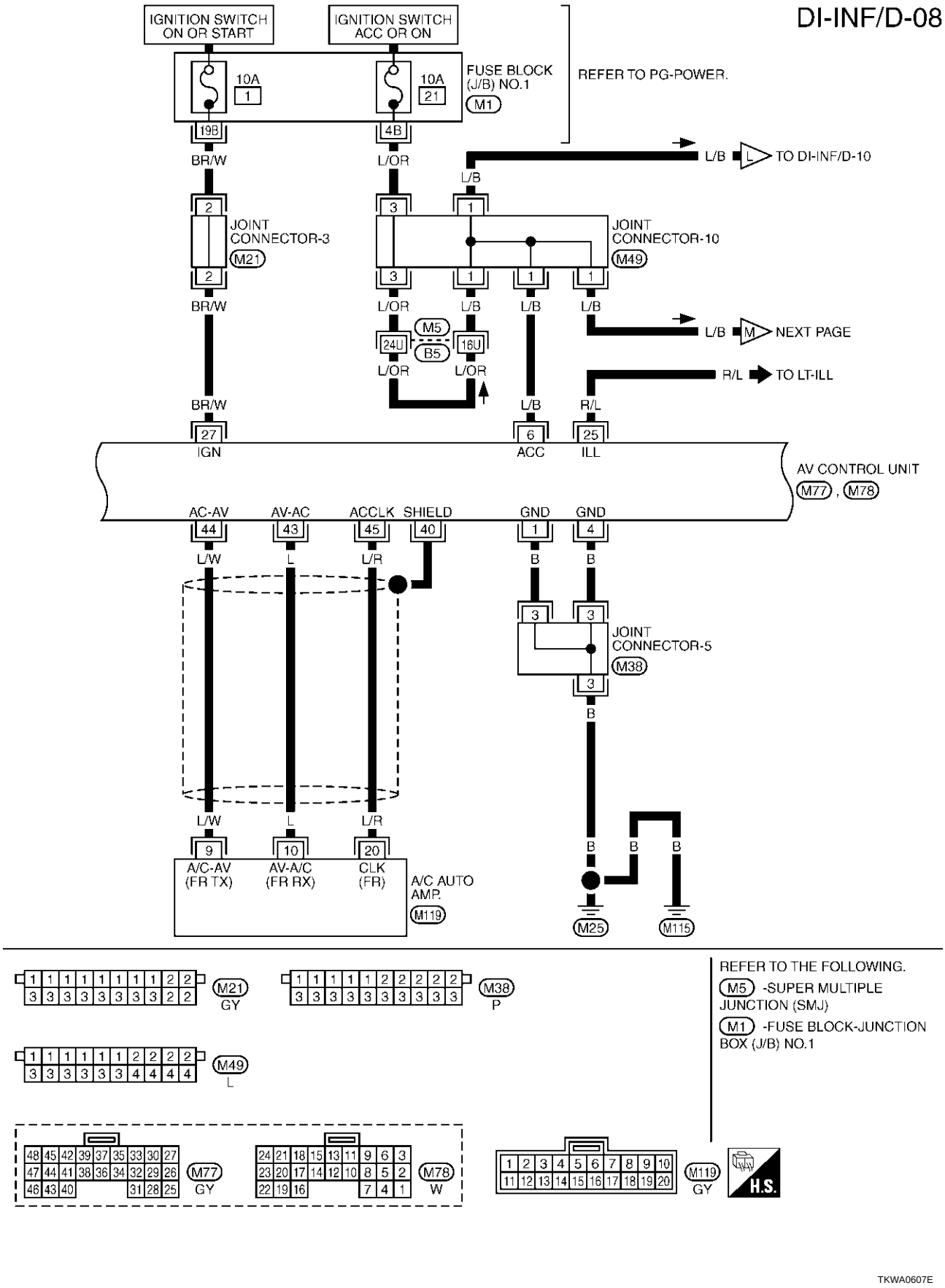
DI-INF/D-08
IGNITION SWITCH ON OR START
IGNITION SWITCH ACC OR ON
FUSE BLOCK (J/B) NO.1
M1
10A
1
10A
21
REFER TO PG-POWER.
19B
4B
BR/W
L/OR
L/B
TO DI-INF/D-10
JOINT CONNECTOR-3
M21
JOINT CONNECTOR-10
M49
M5
24U
B5
16U
NEXT PAGE
R/L
TO LT-ILL
27
IGN
6
ACC
25
ILL
AV CONTROL UNIT
M77 , M78
AC-AV
AV-AC
ACCLK
SHIELD
GND
44
43
45
40
1
4
L/W
L
L/R
B
JOINT CONNECTOR-5
M38
9
10
20
A/C-AV (FR TX)
AV-A/C (FR RX)
CLK (FR)
A/C AUTO AMP.
M119
M25
M115
M21
GY
M38
P
M49
L
M77
GY
M78
W
M119
GY
H.S.
REFER TO THE FOLLOWING.
M5 -SUPER MULTIPLE JUNCTION (SMJ)
M1 -FUSE BLOCK-JUNCTION BOX (J/B) NO.1
TKWA0607E

DI-INF/D-09

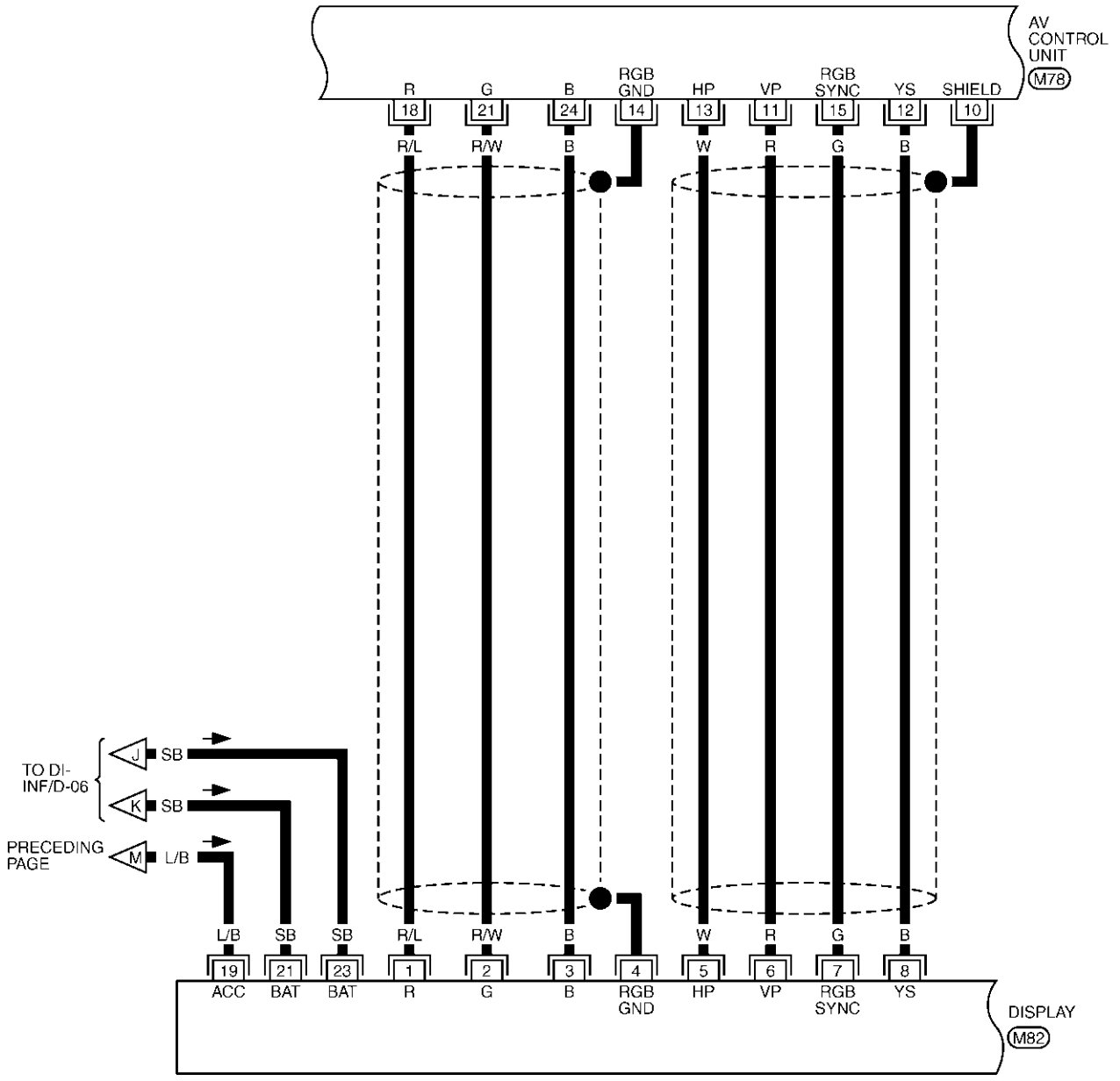

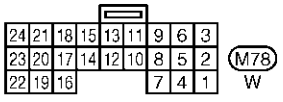

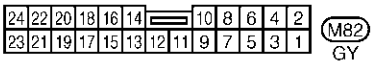

TKWA0608E

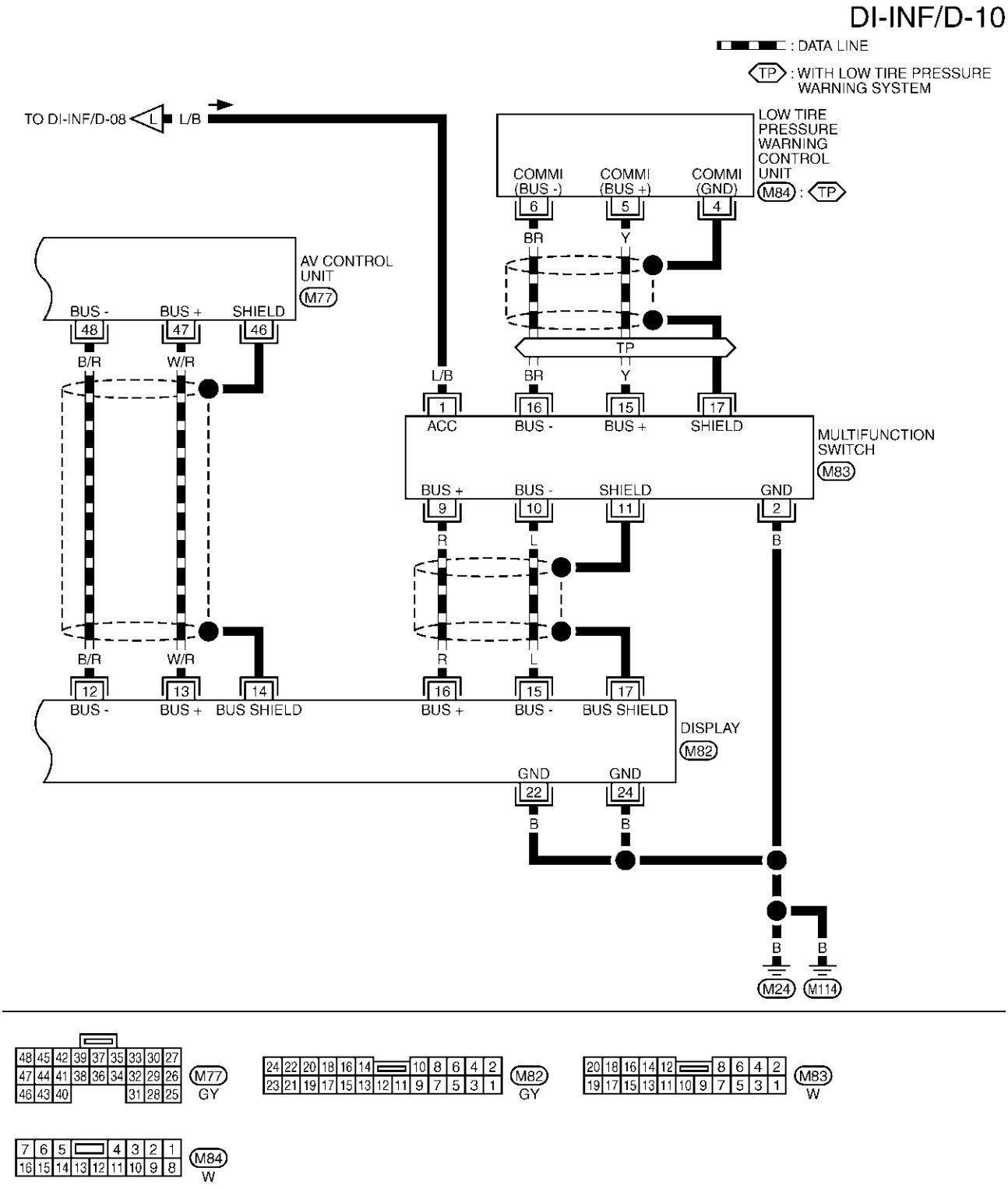
DI-INF/D-10
: DATA LINE
TP : WITH LOW TIRE PRESSURE WARNING SYSTEM
TO DI-INF/D-08
L
L/B
LOW TIRE PRESSURE WARNING CONTROL UNIT
M84 : TP
COMMI (BUS -)
COMMI (BUS +)
COMMI (GND)
6
5
4
BR
Y
TP
AV CONTROL UNIT
M77
BUS -
BUS +
SHIELD
48
47
46
B/R
W/R
L/B
1
ACC
16
BUS -
15
BUS +
17
SHIELD
MULTIFUNCTION SWITCH
M83
BUS +
BUS -
SHIELD
GND
9
10
11
2
R
L
B
12
BUS -
13
BUS +
14
BUS SHIELD
16
BUS +
15
BUS -
17
BUS SHIELD
DISPLAY
M82
GND
22
GND
24
M24
M114
M77
GY
M82
GY
M83
W
M84
W
TKWA0609E

Schematic

AKS003ZV

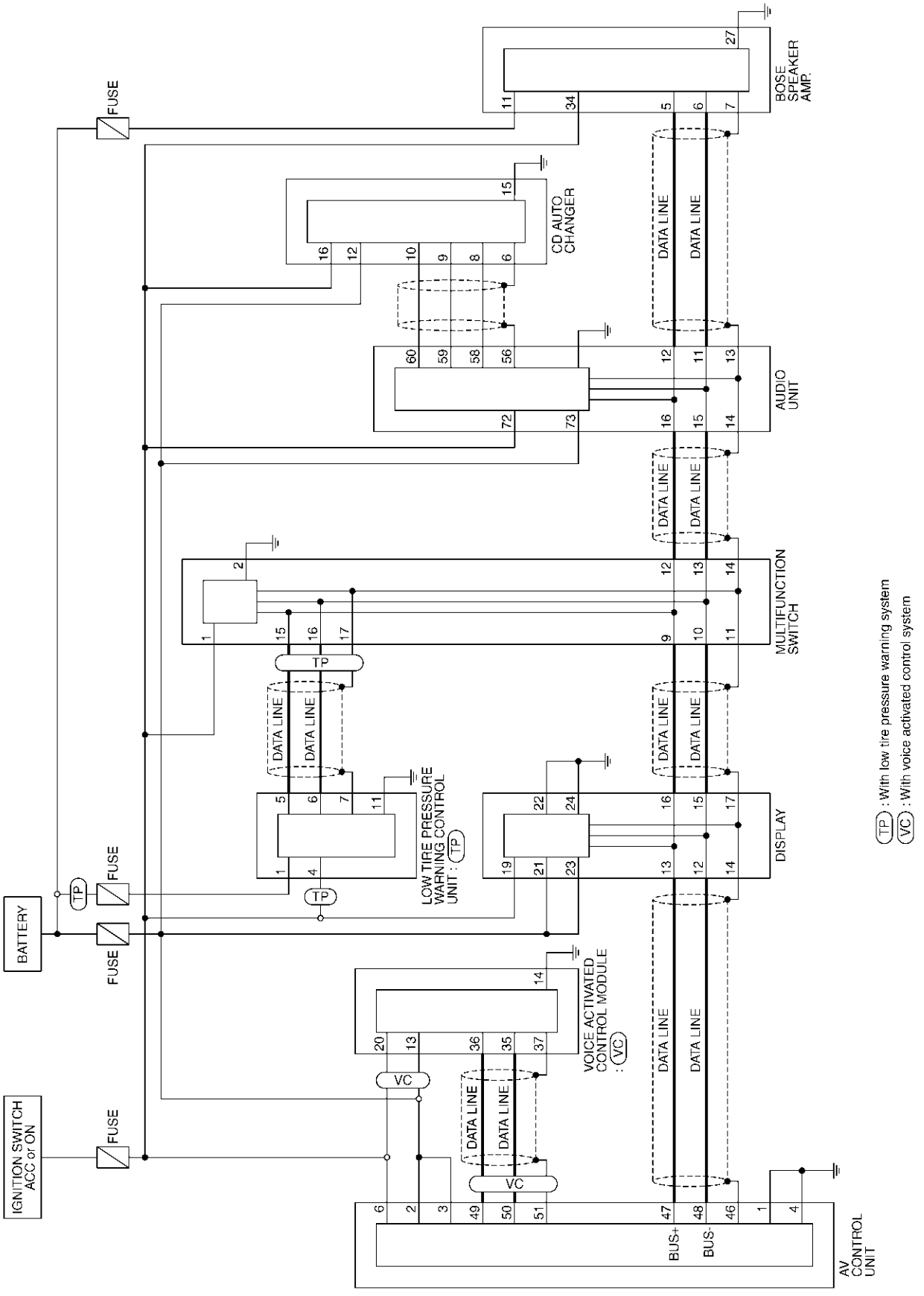

TKWA0610E

Wiring Diagram — COMM —

AKS003ZW

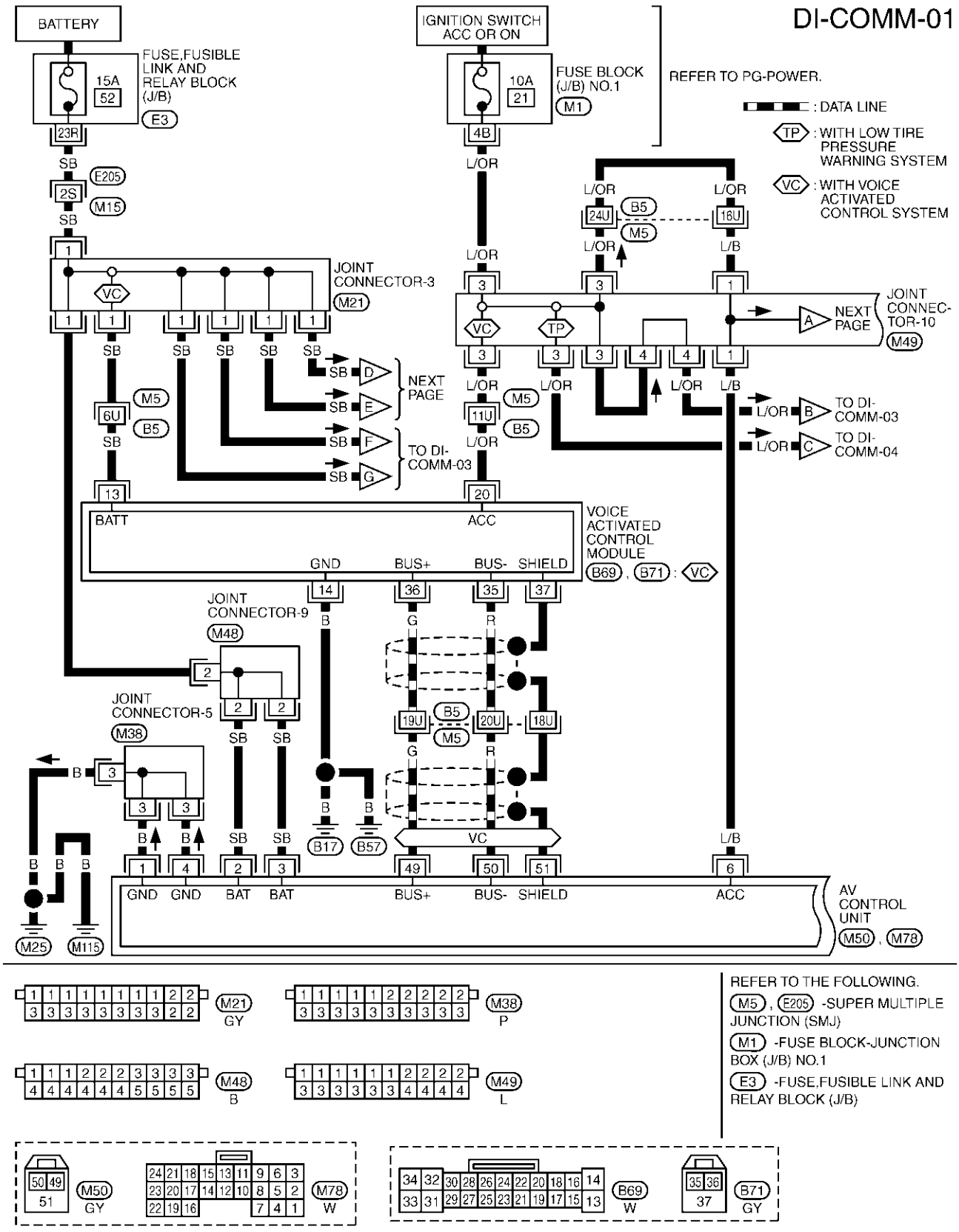

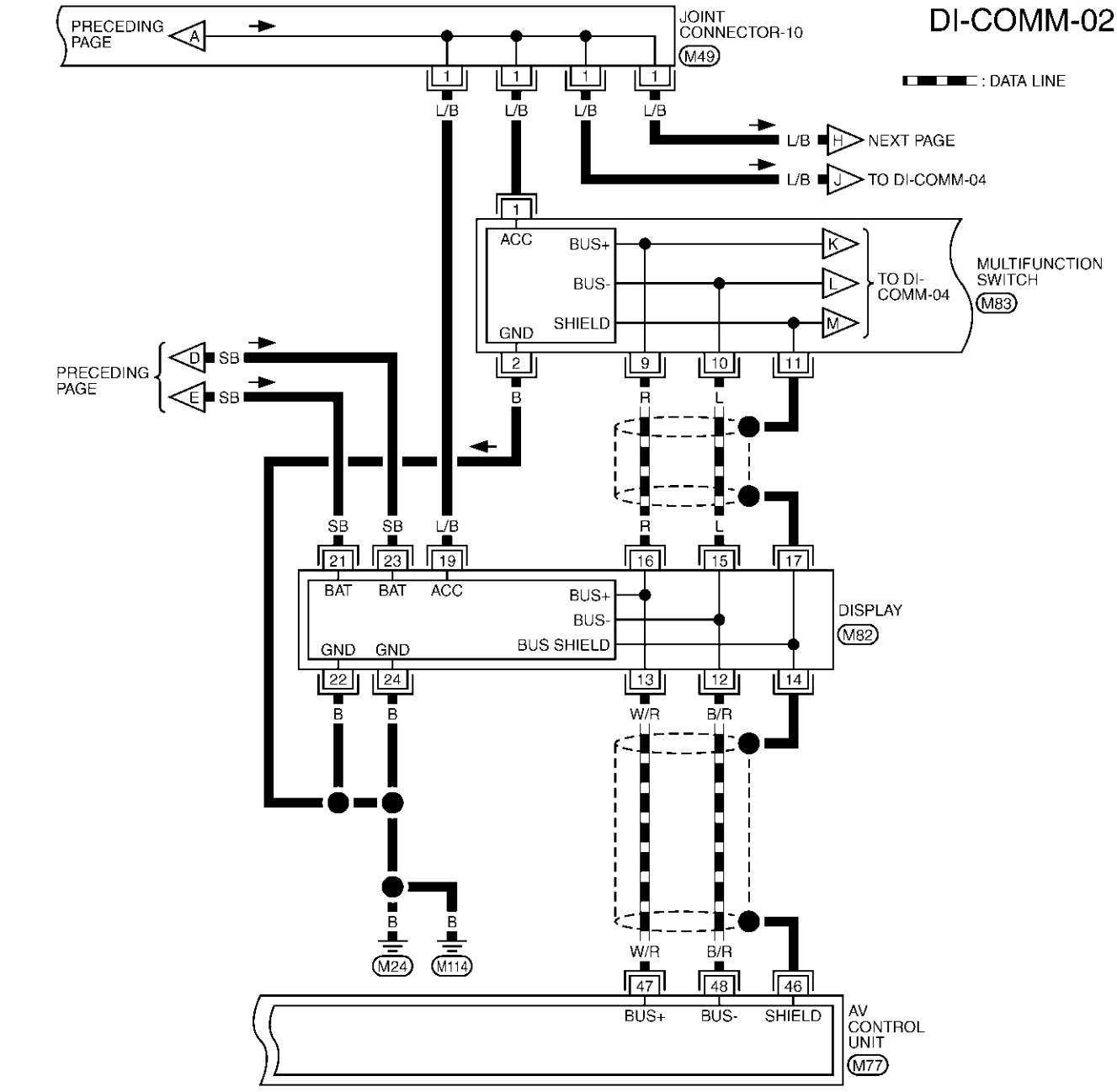
DI-COMM-02
PRECEDING PAGE
A
JOINT CONNECTOR-10
M49
: DATA LINE
L/B
NEXT PAGE
H
TO DI-COMM-04
J
ACC
BUS+
BUS-
SHIELD
GND
K
L
M
TO DI-COMM-04
MULTIFUNCTION SWITCH
M83
D
E
SB
B
R
L
BAT
BUS SHIELD
DISPLAY
M82
W/R
B/R
M24
M114
AV CONTROL UNIT
M77

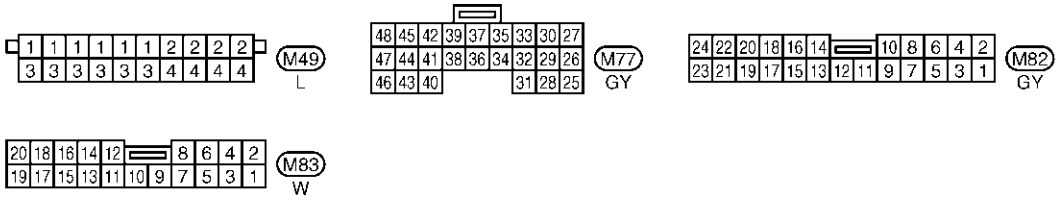
M49
L
M77
GY
M82
GY
M83
W

TKWA0616E

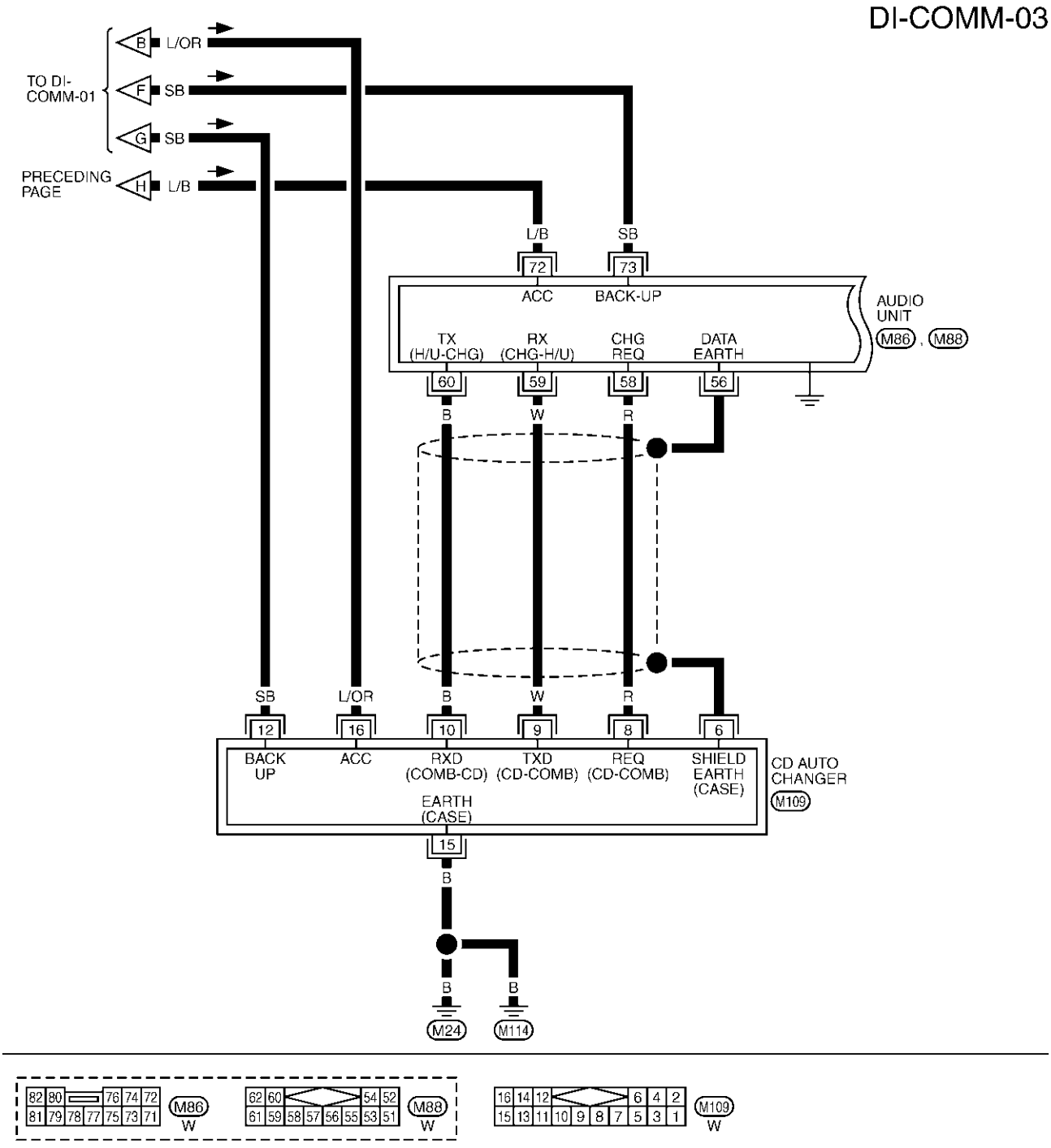
DI-COMM-03
TO DI-COMM-01
PRECEDING PAGE
B L/OR
F SB
G SB
H L/B
L/B
SB
72
73
ACC
BACK-UP
AUDIO UNIT
M86 , M88
TX (H/U-CHG)
RX (CHG-H/U)
CHG REQ
DATA EARTH
60
59
58
56
B
W
R
SB
L/OR
B
W
R
12
16
10
9
8
6
BACK UP
ACC
RXD (COMB-CD)
TXD (CD-COMB)
REQ (CD-COMB)
SHIELD EARTH (CASE)
CD AUTO CHANGER
M109
EARTH (CASE)
15
B
B
B
M24
M114
M86
W
M88
W
M109
W

TKWA0617E

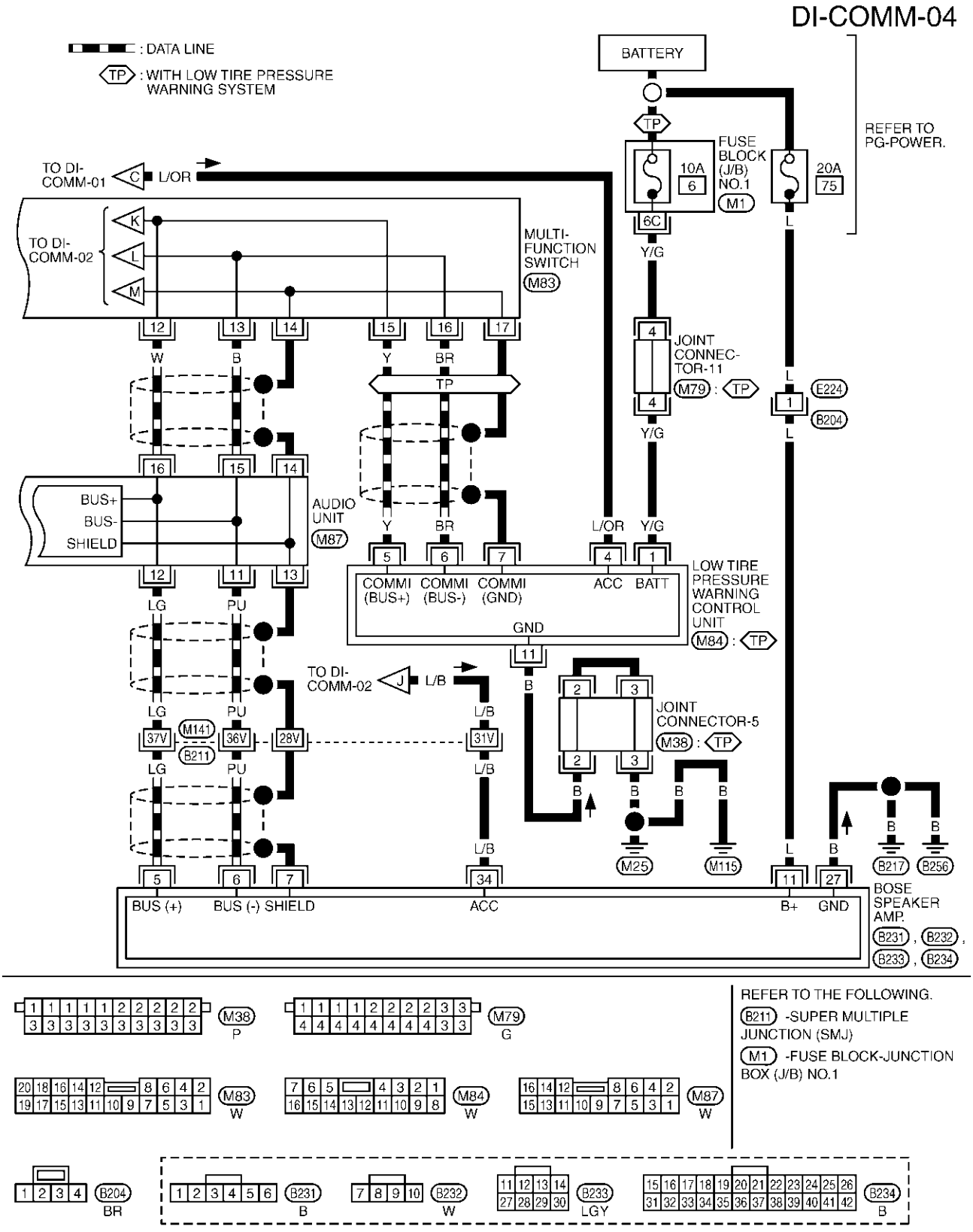
DI-COMM-04
: DATA LINE
TP : WITH LOW TIRE PRESSURE WARNING SYSTEM
BATTERY
REFER TO PG-POWER.
FUSE BLOCK (J/B) NO.1
M1
10A
6
20A
75
TO DI-COMM-01
C
L/OR
TO DI-COMM-02
K
L
M
MULTI-FUNCTION SWITCH
M83
JOINT CONNEC-TOR-11
M79 : TP
E224
B204
AUDIO UNIT
M87
BUS+
BUS-
SHIELD
LOW TIRE PRESSURE WARNING CONTROL UNIT
M84 : TP
COMMI (BUS+)
COMMI (BUS-)
COMMI (GND)
ACC
BATT
GND
TO DI-COMM-02
J
L/B
JOINT CONNECTOR-5
M38 : TP
M141
B211
M25
M115
B217
B256
BUS (+)
BUS (-) SHIELD
ACC
B+
GND
BOSE SPEAKER AMP.
B231 , B232 , B233 , B234
M38
P
M79
G
M83
W
M84
W
M87
W
REFER TO THE FOLLOWING.
B211 -SUPER MULTIPLE JUNCTION (SMJ)
M1 -FUSE BLOCK-JUNCTION BOX (J/B) NO.1
B204
BR
B231
B
B232
W
B233
LGY
B234
B
TKWA0618E

Terminals and Reference Value for AV Control Unit

AKS003ZX

Terminals (+) Terminal No.	Terminals (+) Wire color	Terminals (–)	Signal	Signal input/ output	Condition: Igni-tion switch	Condition: Operation	Reference value	Example of symptom
1	B	Ground	Ground	—	ON	—	Approx. 0V	—
2	SB	Ground	Battery	Input	OFF	—	Battery voltage	System does not work properly.
3	SB							
4	B	Ground	Ground	—	ON	—	Approx. 0V	—
6	L/B	Ground	Ignition switch (ACC)	Input	ACC	—	Battery voltage	System does not work properly.
10	—	—	Shield Ground	—	—	—	—	—
11	R	10	Vertical synchronizing (VP) signal	Input	ON	—	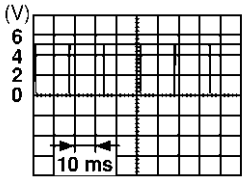 SKIA0161E	Superimposed screen is rolling.
12	B	10	RGB area (YS) signal	Output	ON	Press the “info”switch.	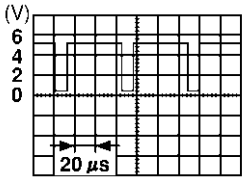 SKIA0162E	RGB screen is not shown.
13	W	10	Horizontal synchronizing (HP) signal	Input	ON	Adjust sound volume while rear view screen is shown.	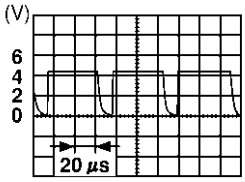 SKIA0163E	RGB screen is not shown.
14	—	Ground	RGB ground	—	—	—	—	—
15	G	10	RGB synchronizing signal	Output	ON	Press the “MAP” switch.	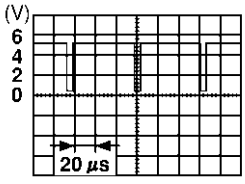 SKIA0164E	RGB screen is rolling.
18	R/L	14	RGB signal (R: red)	Output	ON	Select “SCREEN ADJUSTMENT” of CONFIRMATION/ADJUSTMENT function.	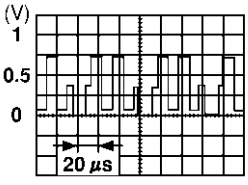 SKIA0165E	RGB screen looks bluish.

Terminals (+) Terminal No.	Terminals (+) Wire color	Terminals (–)	Signal	Signal input/ output	Condition: Igni-tion switch	Condition: Operation	Reference value	Example of symptom
21	R/W	14	RGB signal (G: green)	Output	ON	Select “SCREEN ADJUSTMENT” of CONFIRMA-TION/ADJUST-MENT function.	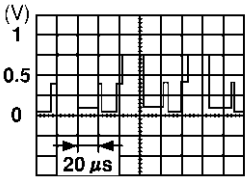 SKIA0166E	RGB screen looks red-dish.
24	B	14	RGB signal (B: blue)	Output	ON	Select “SCREEN ADJUSTMENT” of CONFIRMA-TION/ADJUST-MENT function.	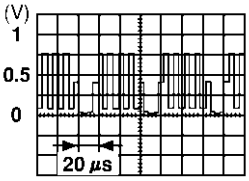 SKIA0167E	RGB screen looks yellow-ish.
25	R/L	Ground	Illumina-tion control signal	Input	ON	Light-ing switch ON (posi-tion 1st)	Optical sensor is exposed to light.	Approx. 3.5V or more	Screen does not switch between day-time mode and nighttime mode.
							Optical sensor is not exposed to light.	Approx. 1.5V or less	
27	BR/W	Ground	Ignition switch (ON)	Input	ON	—		Battery voltage	A/C opera-tion is not possible. Vehicle infor-mation set-ting is not possible.
31	–	—	Shield ground	—	—	—		—	—
33	OR/L	Ground	Vehicle speed sig-nal (8-pulse)	Input	ON	When vehicle speed is approx. 40 km/h (25MPH)	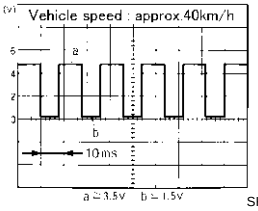 SKIA0168E	Vehicle elec-tronic sys-tem does not indicate the correct posi-tion.
34	LG	Ground	Communi-cation signal (AV - ME)	Output	ON	Display the vehi-cle information screen.	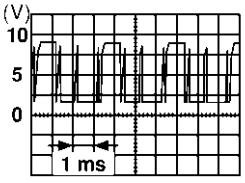 SKIA0169E	Vehicle infor-mation screen is not shown.

Terminals (+) Terminal No.	Terminals (+) Wire color	Terminals (–)	Signal	Signal input/ output	Condition: Igni-tion switch	Condition: Operation	Reference value	Example of symptom
35	PU	Ground	Communi-cation signal (ME - AV)	Input	ON	Perform various settings on the vehicle informa-tion screen.	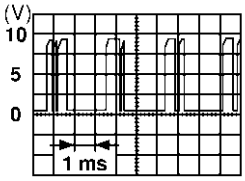 SKIA0170E	Vehicle infor-mation screen is not shown.
40	—	—	Shield ground	—	—	—	—	—
41	P	Ground	CONSULT-II communi-cation signal (AV - CN)	Output	ON	Perform CON-SULT-II.	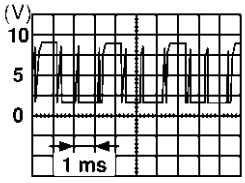 SKIA0169E	Diagnosis with CON-SULT-II is not possible.
42	BR/Y	Ground	CONSULT-II communi-cation signal (CN - AV)	Input	ON	Perform CON-SULT-II.	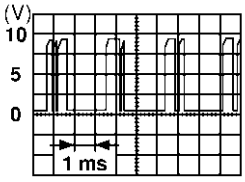 SKIA0170E	Diagnosis with CON-SULT-II is not possible.
43	L	Ground	A/C com-munication signal (AC-AV)	Input	ON	—	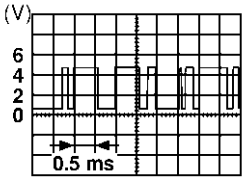 SKIA0173E	A/C status is not indicated correctly.
44	L/W	Ground	A/C com-munication signal (AV-AC)	Output	ON	—	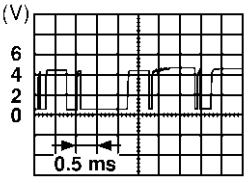 SKIA0172E	A/C opera-tion is not possible.
45	L/R	Ground	A/C clock signal	Input	ON	—	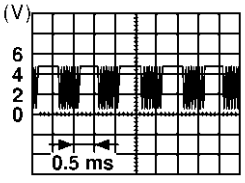 SKIA0174E	A/C status is not indicated correctly.
46	—	—	Shield ground	—	—	—	—	—

Terminals (+) Terminal No.	Terminals (+) Wire color	Terminals (–)	Signal	Signal input/ output	Condition: Ignition switch	Condition: Operation	Reference value	Example of symptom
47	W/R	Ground	Communication signal (+)	Input/ output	ON	—	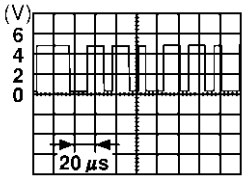 SKIA0175E	System does not work properly.
48	B/R	Ground	Communication signal (-)	Input/ output	ON	—	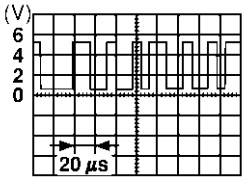 SKIA0176E	System does not work properly.

Terminals and Reference Value for Display

AKS003ZY

Terminals (+) Terminal No.	Terminals (+) Wire color	Terminals (–)	Signal	Condition: Ignition switch	Condition: Operation	Reference value
1	R/L	Ground	RGB signal (R: Red)	ON	Move to “Screen Adjustment” in the check/ adjustment function.	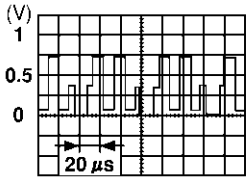 SKIA0165E
2	R/W	Ground	RGB signal (G: Green)	ON	Move to “Screen Adjustment” in the check/ adjustment function.	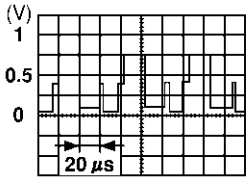 SKIA0166E
3	B	Ground	RGB signal (B: Blue)	ON	Move to “Screen Adjustment” in the check/ adjustment function.	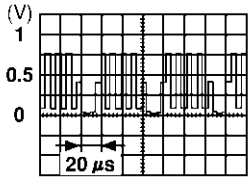 SKIA0167E
4	—	Ground	RGB ground	ON	—	Approx. 0V
5	W	Ground	Horizontal synchronizing signal	ON	ON screen, the volume can be adjusted.	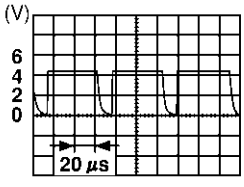 SKIA0163E

Terminals			Signal	Condition		Reference value
(+)		(–)				
Terminal No.	Wire color			Ignition switch	Operation	
6	R	Ground	Vertical synchronizing signal	ON	—	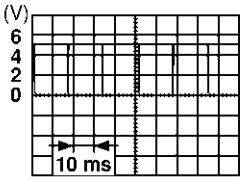 SKIA0161E
7	G	Ground	RGB synchronizing signal	ON	Press the map switch.	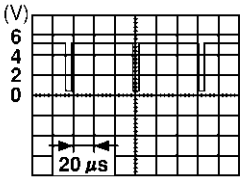 SKIA0164E
8	B	Ground	RGB area signal	ON	Press the vehicle information switch.	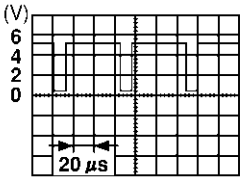 SKIA0162E
12	B/R	Ground	Communication signal (-)	ON	—	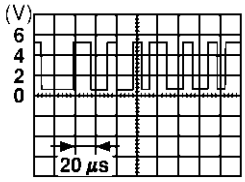 SKIA0176E
13	W/R	Ground	Communication signal (+)	ON	—	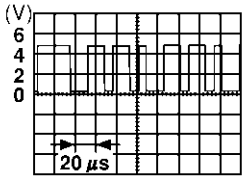 SKIA0175E
14	—	—	Shield ground	—	—	—
15	L	Ground	Communication signal (-)	ON	—	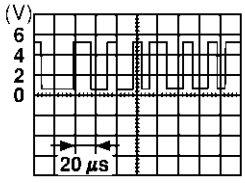 SKIA0176E
16	R	Ground	Communication signal (+)	ON	—	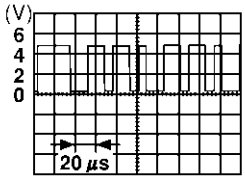 SKIA0175E
17	—	—	Shield ground	—	—	—

Terminals			Signal	Condition		Reference value
(+)		(–)				
Terminal No.	Wire color			Ignition switch	Operation	
19	L/B	Ground	Ignition switch (ACC)	ACC	—	Battery voltage
21	SB	Ground	Battery power	OFF	—	Battery voltage
23	SB					
22	B	Ground	Ground	—	—	—
24	B					

Terminals and Reference Value for Multifunction Switch

AKS003ZZ

Terminals			Signal	Condition		Reference value
(+)		(–)				
Terminal No.	Wire color			Ignition switch	Operation	
1	L/B	Ground	Ignition switch (ACC)	ACC	—	Battery voltage
2	B	Ground	Ground	ON	—	Approx. 0V
9	R	Ground	Communication signal (+)	ON	—	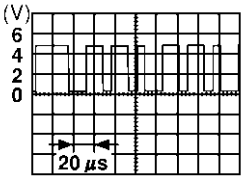 SKIA0175E
10	L	Ground	Communication signal (-)	ON	—	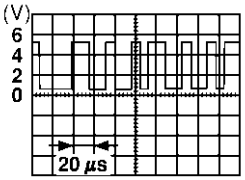 SKIA0176E
11	—	—	Shield ground	—	—	—
15	Y	Ground	Communication signal (+)	ON	—	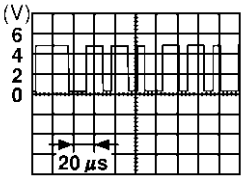 SKIA0175E
16	BR	Ground	Communication signal (-)	ON	—	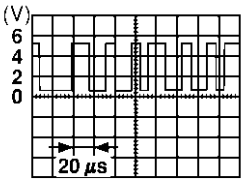 SKIA0176E
17	—	—	Shield ground	—	—	—

On Board Self-Diagnosis Function (without CONSULT-II)

AKS00400

DESCRIPTION

- Diagnosis function consists of the self-diagnosis mode performed automatically and the CONFIRMATION/ ADJUSTMENT mode operated manually.
- Self–diagnosis mode checks for connections between the units constituting this system, analyzes each individual unit at the same time, and displays the results on the LCD screen.
- CONFIRMATION/ADJUSTMENT mode is used to perform trouble diagnosis that require operation and judgment by an operator (trouble that cannot be automatically judged by the system), to check/change the set value, and to display the History of Errors of the navigation system.

DIAGNOSIS ITEM

Mode		Description
Self-Diagnosis		● AV control unit diagnosis (DVD-ROM drive will not be diagnosed when no map DVD-ROM is in it.). ● Analyzes connection between the AV control unit and the GPS antenna connection between the AV control unit and each unit, and operation of each unit.
CONFIRMATION/ ADJUSTMENT	Display Diagnosis	Color tone and shading of the screen can be checked by the display of a color bar and a gray scale.
	Vehicle Signals	Analyzes the following vehicle signals: Vehicle speed signal, parking brake signal, light signal, ignition switch signal, and reverse signal.
	Speaker Test	Checks the connection of each speaker using a test tone.
	Auto Climate Control	Turns all A/C screens on display and A/C switch indicator lamp on.
	Rear View Camera	Changes position of the aiming line overlapped on the rear view image.

Self-Diagnosis Mode

AKS00401

OPERATION PROCEDURE

1. Start the engine.
2. Turn the audio system off.
3. While pressing the “INFO” switch, turn the volume control dial clockwise or counterclockwise for 30 clicks or more. (When the self-diagnosis mode is started, a short beep will be heard.)
   - Shifting from current screen to previous screen is performed by pressing “PREV” switch.

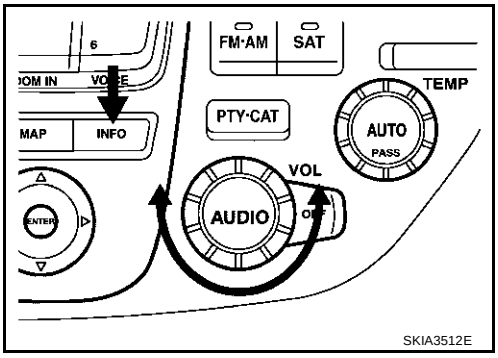

4. The initial trouble diagnosis screen will be shown, and items “SELF DIAGNOSIS” and “Confirmation/Adjustment” will become selective.

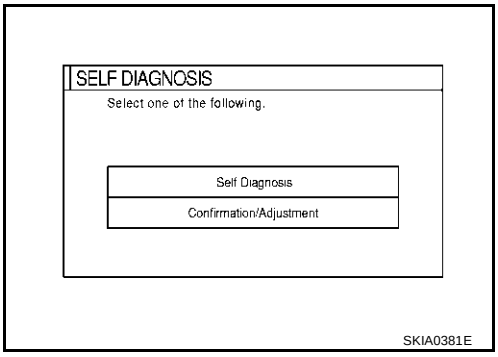

5. Perform self-diagnosis by selecting the “SELF DIAGNOSIS”.
   - Self-diagnosis subdivision screen will be shown and the operation enters the self-diagnosis mode.
   - A bar graph shown below the self-diagnosis subdivision screen indicates progress of the diagnosis.

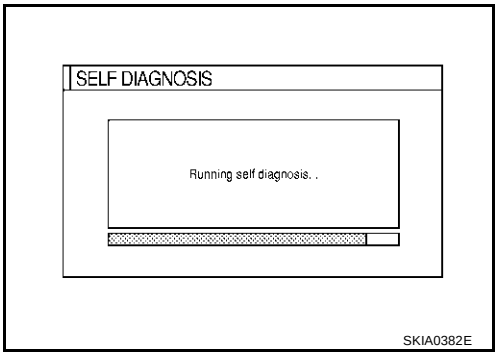

6. When the self-diagnosis completes, optional part confirmation screen will be shown.
   - When connection of an optional part is judged faulty, a screen to check if the optional part is actually fitted on the vehicle or not will be shown. When fitted, select the switch of the part on the screen and press “END”. Then the “SELF DIAGNOSIS” screen will be shown.
   - When the optional part is connected normally, the switch for the part will not appear on the screen.

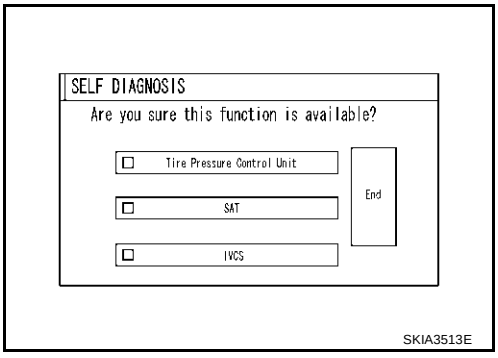

7. On the “SELF DIAGNOSIS” screen, each unit name will be colored according to the diagnosis result, as follows.

   Green : No malfunctioning.

   Yellow : Cannot be judged by self–diagnosis results.

   Red : Unit is malfunctioning.

   - If several malfunctions are present in a unit, color of its switch on the screen will be either red or yellow determined by the malfunction of the highest priority.

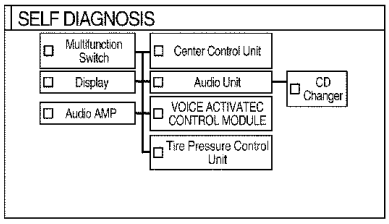

SKIA0615E

CAUTION:
“Tire Pressure Control Unit” on the screen will be illuminated in yellow when performing self-diagnosis with ignition switch in ACC position.

8. Select a switch on the “SELF DIAGNOSIS” screen and comments for the diagnosis results will be shown.
   - When the switch is green, the following comment will be shown. “Self-diagnosis was successful. Further diagnosis and adjustments are recommended. Follow the “confirmation and adjustments” menu or refer to the service manual.”.
   - When the switch is yellow, the following comment will be shown. “Connection to the following unit is abnormal. See the Service Manual for further details”.
   - When the switch is red, the following comment will be shown. “Center Control Unit is abnormal”.

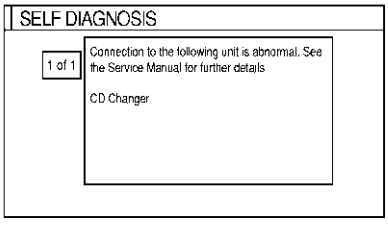

SKIA0385E

SELF-DIAGNOSIS RESULT

Quick reference table

1. Select an applicable diagnosis No. in the diagnosis result quick reference table.
2. Find estimated malfunctioning system in the diagnosis No. table and perform check by referring to DI-115, "Wiring Diagram — COMM —" .
3. Turn the ignition switch to OFF and perform self-diagnosis again.

Screen switch								Diagnosis No.
Switch color	Center control unit*1	Display	Tire pressure control unit	Audio unit	CD auto changer	Audio amp.*2	Voice activated control module	
Red	×							1
Yellow	×	×						2
	×		×					3
	×			×	×			4
					×			5
	×						×	6
	×					×		7
	×			×	×	×		8

- *1: Center control unit = AV control unit
- *2: Audio amp. = BOSE speaker amp.

CAUTION:

- **When multifunction switch has a malfunction, you can not start.**
- **Check the following when the self–diagnosis mode you can not use.**
  - **AV communication line between AV control unit and Display, AV communication line between Display and multifunction switch.**
  - **multifunction switch power supply and ground circuit**
- **When an error is in the AV communication line, it cannot be detected on the screen because self–diagnosis is inoperative. However, the error can be detected with CONSULT–II.**

Self-diagnosis codes

Diagnosis No.	Possible cause
1	AV control unit malfunction
2	Display power supply and ground circuit
3	● Low tire pressure warning control unit power supply and ground circuit, ● AV communication line between low tire pressure warning control unit and multifunction switch.
4	Audio unit power supply and ground circuit
5	● CD auto changer power supply and ground circuit ● AV communication line between CD auto changer and audio unit.
6	Voice activated control module power supply and ground circuit.
7	● BOSE speaker amp. power supply and ground circuit. ● AV communication line between BOSE speaker amp. and audio unit. ● BOSE speaker amp. internal communication circuit.
8	● AV communication line between audio unit and multifunction switch. ● Audio control unit communication circuit.

Confirmation/Adjustment Mode

AKS00402

OPERATION PROCEDURE

1. Start the engine.
2. Turn the audio system off.
3. While pressing the “INFO” switch, turn the volume control dial clockwise or counterclockwise for 30 clicks or more. (When the self–diagnosis mode is started, a short beep will be heard.)
   - Shifting from current screen to previous screen is performed by pressing “PREV” switch.

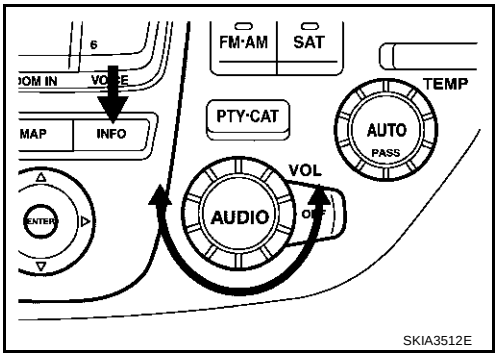

4. The initial trouble diagnosis screen will be shown, and items “SELF DIAGNOSIS” and “Confirmation/Adjustment” will become selective.

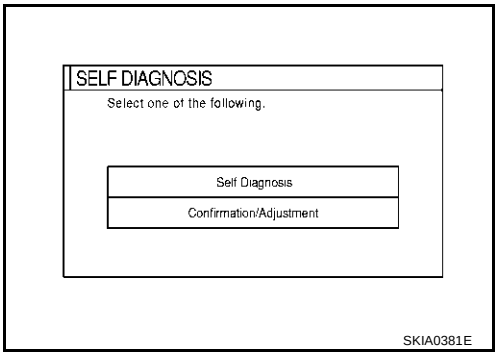

5. When “Confirmation/Adjustment” is selected on the initial trouble diagnosis screen, the operation will enter the CONFIRMATION/ ADJUSTMENT mode. In this mode, check and adjustment of each item will become possible.
6. Select each switch on “Confirmation/Adjustment” screen to display the relevant diagnosis screen.

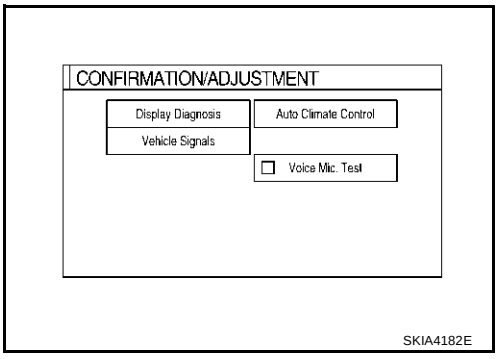

DISPLAY DIAGNOSIS

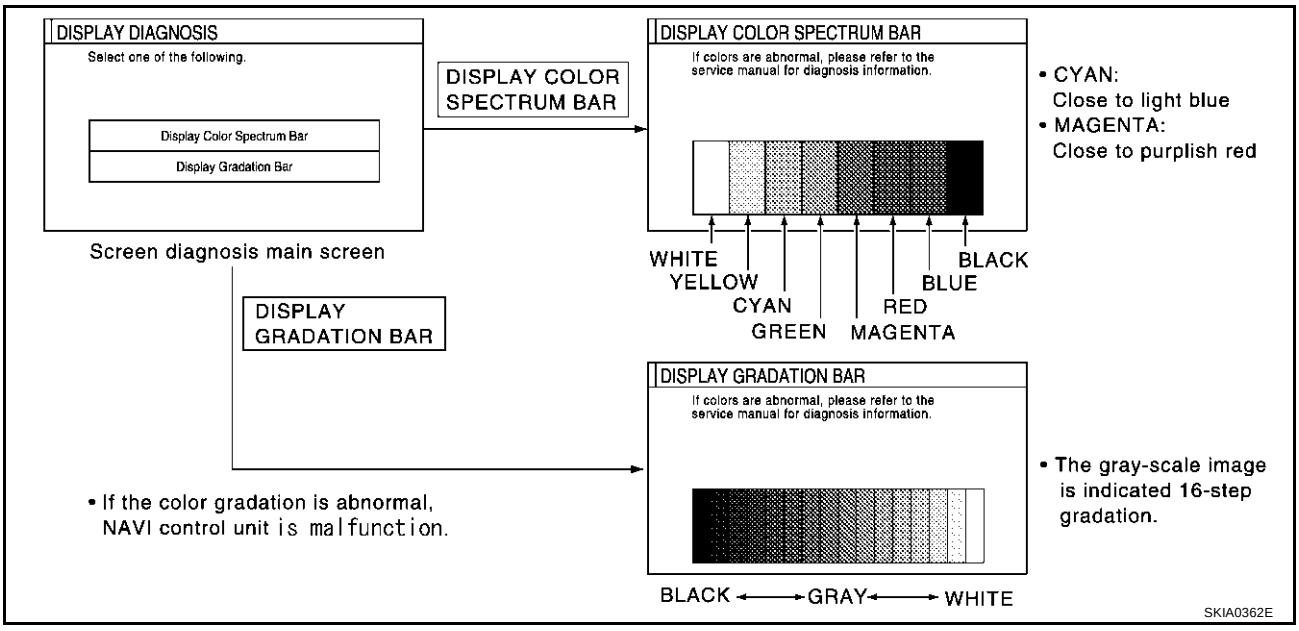

CAUTION:

When DISPLAY COLOR SPECTRUM BAR screen is completed after "PREV" switch is pressed, the screen color changes once. This is not abnormal.

- When RGB signal error occurred in the RGB system, tone of the color bar will change as follows.

R (red) signal error	**: Screen looks bluish**
G (green) signal error	**: Screen looks yellowish**
B (blue) signal error	**: Screen looks reddish**

- When the color of the screen looks unusual, refer to DI-143, "Color of RGB Image is not Proper" .

VEHICLE SIGNALS

- A comparison check can be made of each actual vehicle signal and the signals recognized by the system.

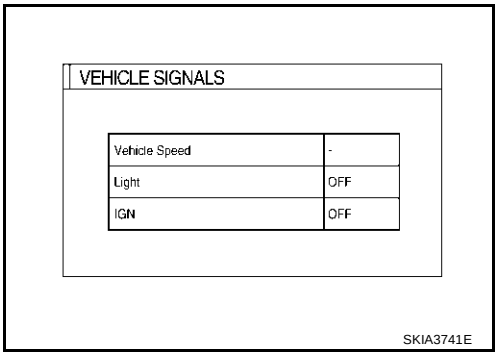

Diagnosis item	Display	Condition	Remarks
Vehicle Speed	ON	Vehicle speed > 0 km/h (0 MPH)	Changes in indication may be delayed by approx. 1.5 seconds. This is normal.
	OFF	Vehicle speed = 0 km/h (0 MPH)	
	–	Ignition switch in ACC position	
Light	ON	Lighting switch ON	–
	OFF	Lighting switch OFF	
IGN	ON	Ignition switch ON	–
	OFF	Ignition switch ACC or OFF	

- If vehicle speed is NG, refer to DI-140, "Vehicle Speed Signal Inspection" .
- If light is NG, refer to DI-141, "Illumination Control Signal Inspection" .
- If IGN is NG, refer to DI-141, "Ignition Signal Inspection" .

AUTO CLIMATE CONTROL

- Refer to ATC Automatic Air Conditioner ATC-49, "Self-diagnosis Function" for the details.

CONSULT-II Function

AKS00403

CONSULT-II BASIC OPERATION PROCEDURE

1. With the ignition switch OFF, connect “CONSULT-II” and “CONSULT-II CONVERTER” to the data link connector, and turn the ignition switch ON.

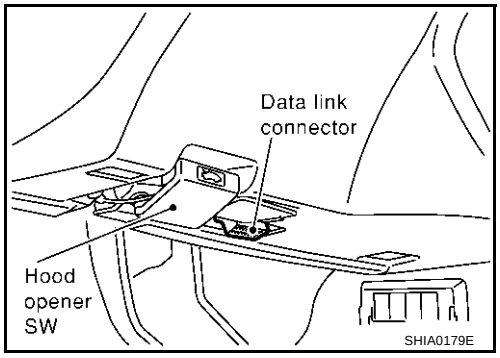

2. Touch “START(NISSAN BASED VHCL)”.

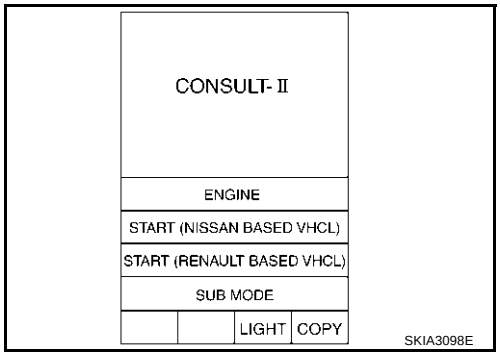

3. Touch “MULTIAV” on “SELECT SYSTEM” screen.
   If “MULTIAV” is not indicated, go to GI-38, "CONSULT-II Data Link Connector (DLC) Circuit" .
4. Select “VIRSION”, ”SELF-DIAG RESULTS” or “SIGNAL MONITOR”.

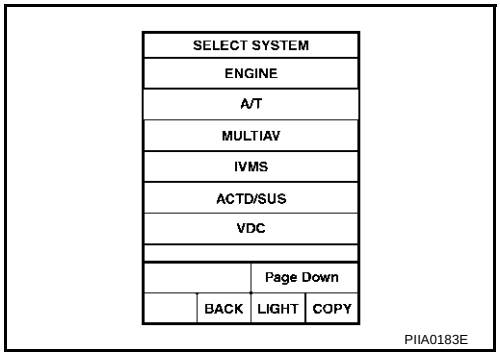

SELF-DIAG RESULTS

- Checks for connection between each unit and analyzes each individual unit, then displays the results on the screen.

Items shown

Items shown	Malfunctioning part/reference page
NO DTC IS DETECTED. FURTHER TESTING MAY BEREQUIRED.	–
HEAD UNIT ABNORMAL	AV control unit malfunction.
PANEL SW ABNORMAL CONNECTION	Refer to DI-129, "Quick reference table" .
AUDIO HEAD UNIT ABNORMAL CONNECTION	Refer to DI-129, "Quick reference table" .
AIR COMP RECEIVER ABNORMAL CONNECTION	Refer to DI-129, "Quick reference table" .
BOSE AMP ABNORMAL CONNECTION	Refer to DI-129, "Quick reference table" .
BOSE AMP ABNORMAL	BOSE speaker amp. malfunction.
VOICE UNIT ABNORMAL CONNECTION	Refer to DI-129, "Quick reference table" .
VOICE UNIT ABNORMAL	Voice activated control module malfunction
REAR VIEW CAMERA ABNORMAL CONNECTION	See note.
PANEL SW ABNORMAL CONNECTION (MULTIFUNCTION SW)	Refer to DI-129, "Quick reference table" .
IVCS ABNORMAL CONNECTION	See note.

NOTE:
When “IVCS ABNORMAL CONNECTION” and “REAR VIEW CAMERA ABNORMAL CONDITION” are indicated, it does not malfunction.

DATA MONITOR

- Displays status of the vehicle signal input to the AV control unit. (Refer to DI-131, "Confirmation/Adjustment Mode" for operation conditions for the connections to be indicated.)

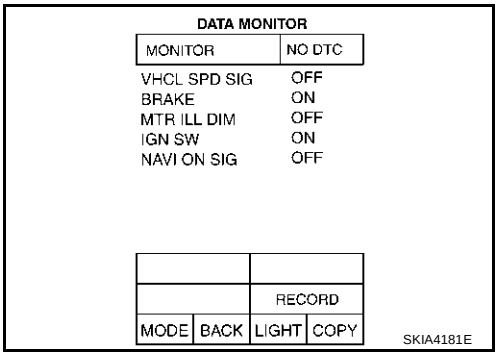

- For each signal, a comparison of actual operating status and the status recognized by the system can be checked.

DATA MONITOR item	Display	Condition	Remarks
VHCL SPD SIG	ON	Vehicle speed > km/h (0MPH)	Changes in indication may be delayed by approx. 1.5 seconds. This is normal.
	OFF	Vehicle speed = km/h (0MPH)	
	–	Ignition switch in ACC position	
BRAKE	ON	–	This item cannot be monitored. (No change of display)
MTR ILL DIM	ON	Lighting switch ON	–
	OFF	Lighting switch OFF	
IGN SW	ON	Ignition switch ON	–
	OFF	Ignition switch ACC or OFF	
NAVI ON SIG	OFF	–	This item cannot be monitored. (No change of display)

VERSION

Displays version of each unit connected to the AV control unit.

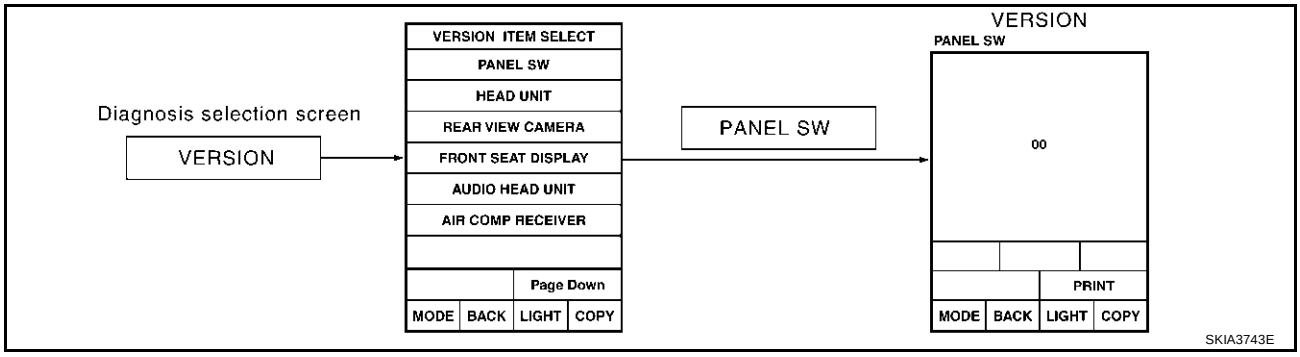

Version display	Remarks
“PANEL SW”	Multifunction switch
“HEAD UNIT”	AV control unit
“REAR VIEW CAMERA”	–
“FRONT SEAT DISPLAY”	Display
“AUDIO HEAD UNIT”	–
“AIR COMP RECEIVER”	Low Tire Pressure Warning Control Unit
“BOSE AMP”	–
“IVCS”	–
“VOICE UNIT”	Voice Activated Control Module

Multifunction Switch Self-Diagnosis Function

AKS00404

It can check ON/OFF operation of each switch in the multifunction switch and diagnose the input signals to the rear control switch (audio) and steering switch (audio).

STARTING THE SELF-DIAGNOSIS MODE

1. Turn ignition switch from OFF to ACC.
2. Within 10 seconds press and hold the function switches “1” and “6 ”simultaneously for 5 seconds.

Then the self-diagnosis operates.

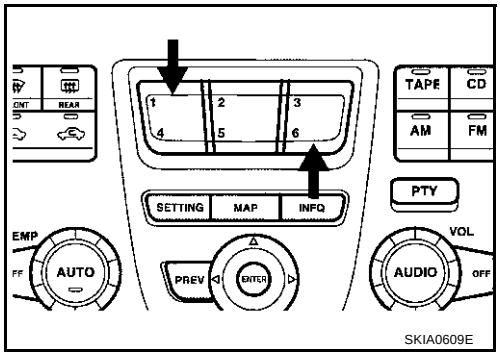

EXITING THE SELF-DIAGNOSIS MODE

- Turn ignition switch OFF, or press and hold the function switches “1” and “6” simultaneously for 5 seconds. Then the self-diagnosis ends.

DIAGNOSIS FUNCTION

- It can illuminate all the indicators (LED) in the multifunction switch.
- It can check for continuity of the switches by sounding the buzzer when the multifunction switch is pressed.
- It can check for continuity of harness between multifunction switch and rear control switch (audio), or steering switch (audio).

Power Supply and Ground Circuit Inspection for AV Control Unit

AKS004OI

1. CHECK FUSE

Check AV control unit fuses are not blown.

Unit	Power source	Fuse No.
AV control unit	Battery power	52
	Ignition switch ACC or ON	21

OK or NG

OK >> GO TO 2.
NG >> If fuse is blown, be sure to eliminate cause of malfunction before installing new fuse. Refer to PG-2, "POWER SUPPLY ROUTING" .

2. CHECK POWER SUPPLY CIRCUIT

1. Disconnect AV control unit connector.
2. Check voltage between AV control unit and ground.

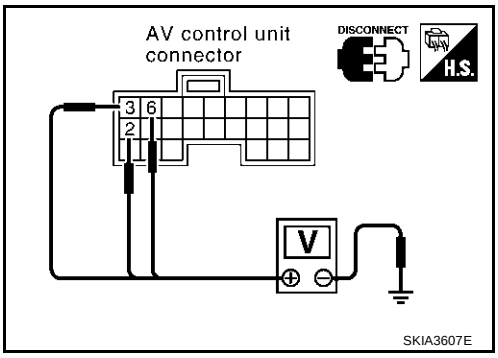

Terminals			Ignition switch position		
(+)		(-)	OFF	ACC	ON
Connector	Terminal (Wire color)				
M78	2 (SB)	Ground	Battery voltage	Battery voltage	Battery voltage
	3 (SB)	Ground	Battery voltage	Battery voltage	Battery voltage
	6 (L/B)	Ground	0V	Battery voltage	Battery voltage

OK or NG

OK >> GO TO 3.
NG >> Check harness for open or short between AV control unit and fuse.

3. CHECK GROUND CIRCUIT

1. Turn ignition switch OFF.
2. Check continuity between AV control unit harness connector M78 terminals 1 (B), 4 (B) and ground.

Continuity should exist.

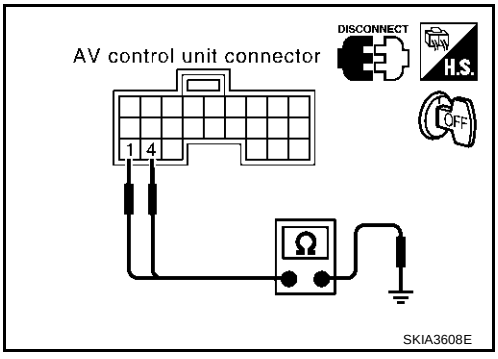

OK or NG

OK >> Inspection end.
NG >> Repair harness or connector.

Power Supply and Ground Circuit Inspection for Display

AKS004OJ

1. CHECK FUSES

- Check 15A fuse [No. 52, located in fuse, fusible link and relay block (J/B)] is blown.
- Check 10A fuse [No. 21, located in fuse block (J/B) NO. 1] is blown.

OK or NG

OK >> GO TO 2.
NG >> If fuse is blown, be sure to eliminate cause of malfunction before installing new fuse. Refer to PG-2, "POWER SUPPLY ROUTING" .

2. CHECK POWER SUPPLY CIRCUIT

1. Disconnect display connector.
2. Check voltage between display and ground.

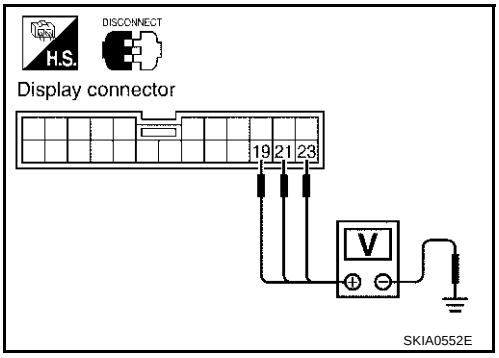

Terminals			Ignition switch position		
(+)		(–)	OFF	ACC	ON
Connector	Terminal (Wire color)				
M82	19 (L/B)	Ground	0V	Battery voltage	Battery voltage
	21 (SB)	Ground	Battery voltage	Battery voltage	Battery voltage
	23 (SB)	Ground	Battery voltage	Battery voltage	Battery voltage

OK or NG

OK >> GO TO 3.
NG >> Check harness for open or short between display and fuse.

3. CHECK GROUND CIRCUIT

1. Turn ignition switch OFF.
2. Check continuity between display and ground.

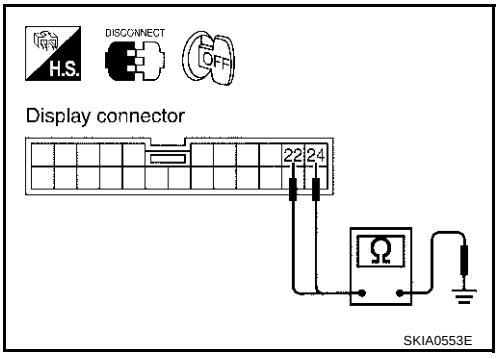

Terminals			Continuity
(+)		(–)	
Connector	Terminal (Wire color)		
M82	22 (B)	Ground	Yes
M82	24 (B)	Ground	

OK or NG

OK >> Inspection end.
NG >> Repair harness or connector.

Inspection of Multifunction Switch for Power Supply and Ground Circuit

AKS004OK

1. CHECK POWER SUPPLY CIRCUIT

1. Disconnect multifunction switch connector.
2. Check voltage between multifunction switch and ground.

Terminals			Ignition switch position		
(+)		(–)	OFF	ACC	ON
Connector	Terminal (wire color)				
M83	1 (L/B)	Ground	0V	Battery voltage	Battery voltage

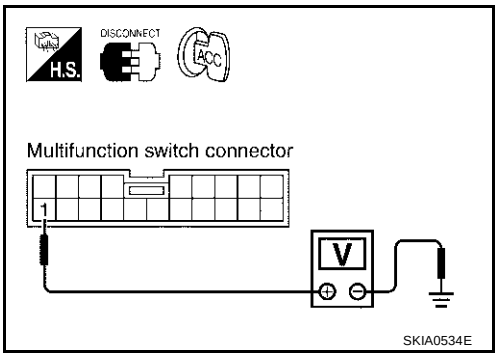

OK or NG

OK >> GO TO 2.
NG >> Check harness for open or short between multifunction switch and fuse.

2. CHECK GROUND CIRCUIT

1. Turn ignition switch OFF.
2. Check continuity between multifunction switch harness connector M83 terminal 2 (B) and ground.

Continuity should exist.

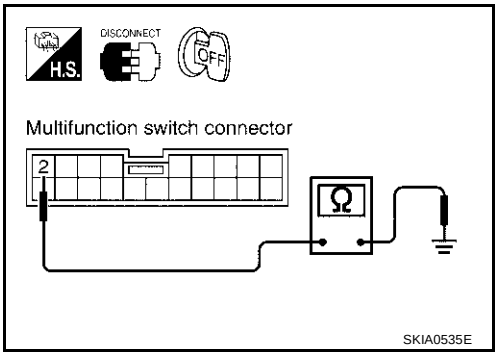

OK or NG

OK >> Inspection end.
NG >> Repair harness or connector.

Vehicle Speed Signal Inspection

AKS004OL

1. CHECK HARNESS

1. Disconnect AV control unit and combination meter connector.
2. Check continuity between AV control unit harness connector M77 terminal 33 (OR/L) and ground.

   Continuity should not exist.

3. Check continuity between AV control unit harness connector M77 terminal 33 (OR/L) and combination meter harness connector M41 terminal 37 (OR/L).

   Continuity should exist.

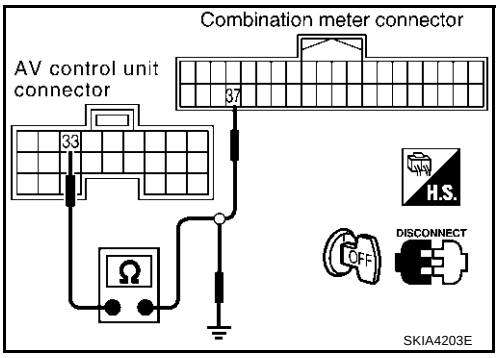

OK or NG

OK >> GO TO 2.
NG >> ● Check connector housings for disconnected or loose terminals.
● Repair harness or connector.

2. VEHICLE SPEED SIGNAL CHECK 1

1. Connect AV control unit connector.
2. Turn ignition switch ON.
3. Check voltage between AV control unit harness connector M77 terminal 33 (OR/L) and ground.

   Approx. 3.5V or more

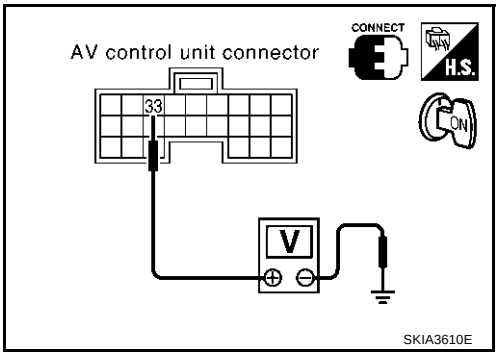

OK or NG

OK >> GO TO 3.
NG >> Replace AV control unit.

3. VEHICLE SPEED SIGNAL CHECK 2

1. Connect combination meter connector.
2. Start engine and drive vehicle at more than 40km/h (25MPH).
3. Check signal between AV control unit harness connector M77 terminal 33 (OR/L) and ground.

   33 (OR/L) - Ground **: Refer to DI-119, "Terminals and Reference Value for AV Control Unit" .**

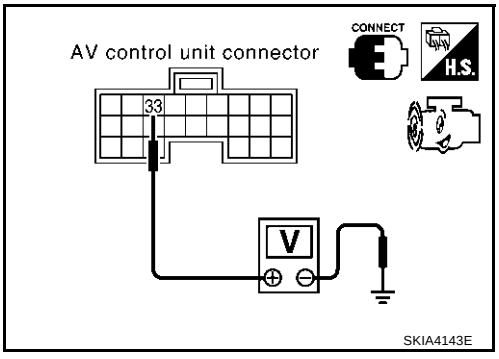

OK or NG

OK >> Replace AV control unit.
NG >> Check combination meter. Refer to DI-19, "Inspection/ Vehicle Speed Signal" .

Illumination Control Signal Inspection

AKS004OM

1. CHECK ILLUMINATION CONTROL SIGNAL

1. Turn ignition switch ON.
2. Check voltage between AV control unit and ground.

Terminals			Lighting switch condition	Voltage (V)
(+)		(-)		
Connector	Terminal (Wire color)			
M77	25 (R/L)	Ground	1st or 2nd position	Approx. 3.5V or more
			OFF	Less than Approx. 1.5V

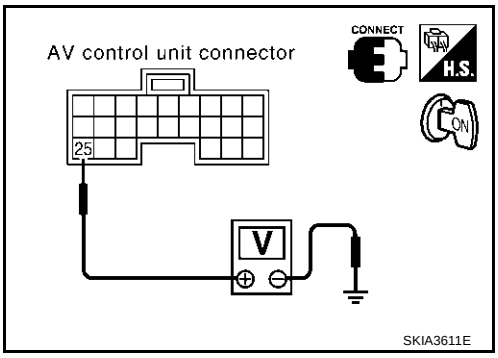

OK or NG

OK >> Replace AV control unit.
NG >> Check harness for open or short between AV control unit and BCM.

Ignition Signal Inspection

AKS004ON

1. CHECK IGNITION SIGNAL

1. Disconnect AV control unit connector.
2. Check voltage between AV control unit and ground.

Terminals			Ignition switch position		
(+)		(-)	OFF	ACC	ON
Connector	Terminal (Wire color)				
M77	27 (BR/W)	Ground	0V	0V	Battery voltage

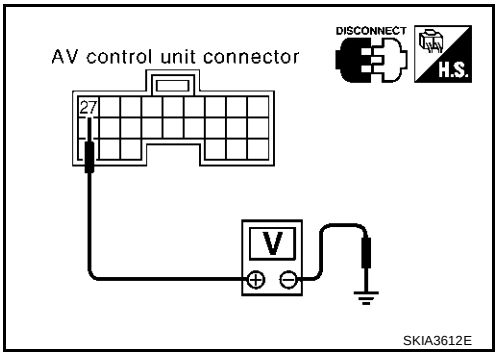

OK or NG

OK >> Replace AV control unit.
NG >> Check harness for open or short between AV control unit and fuse.

RGB Screen is not Shown

AKS004OO

1. CHECK HARNESS

1. Disconnect AV control unit and display connector.
2. Check continuity between AV control unit harness connector M78 terminal 12 (B) and display harness connector M82 terminal 8 (B).

   Continuity should exist.

3. Check continuity between AV control unit harness connector M78 terminal 13 (W) and display harness connector M82 terminal 5 (W).

   Continuity should exist.

4. Check continuity between AV control unit harness connector M78 terminal 12 (B), 13 (W) and ground.

   Continuity should not exist.

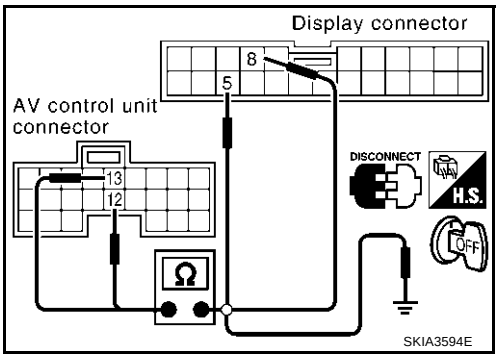

OK or NG

OK >> GO TO 2.
NG >> ● Check connector housings for disconnected or loose terminals.
● Repair harness or connector.

2. CHECK HORIZONTAL SYNCHRONIZATION SIGNAL

1. Connect AV control unit connector and display connector.
2. Turn ignition switch ON.
3. Check voltage signal between AV control unit harness connector M78 terminals 13 (W) and 10.

   13 (W) - 10 **: Refer to DI-119, "Terminals and Reference Value for AV Control Unit" .**

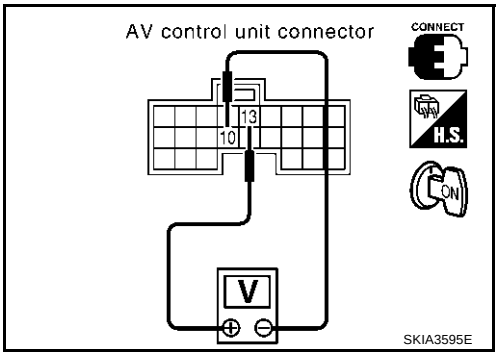

OK or NG

OK >> GO TO 3.
NG >> Replace display.

3. CHECK RGB AREA SIGNAL

1. Press “INFO” switch.
2. Check voltage signal between AV control unit harness connector M78 terminals 12 (B) and 10.

   12 (B) - 10 **: Refer to DI-119, "Terminals and Reference Value for AV Control Unit" .**

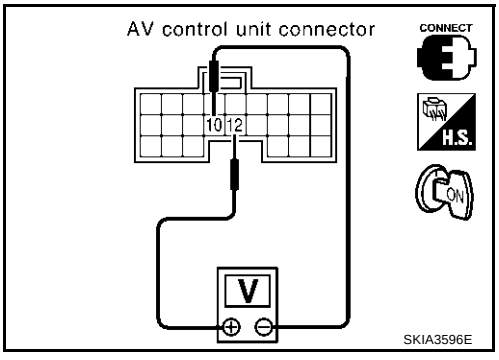

OK or NG

OK >> Replace display.
NG >> Replace AV control unit.

Color of RGB Image is not Proper

AKS004OP

1. CHECK COLOR BAR DIAGNOSIS

Check color tone by “SCREEN ADJUSTMENT” of CONFIRMATION/ADJUSTMENT function.

OK or NG

OK >> Inspection end.
NG >> GO TO 2.

2. CHECK HARNESS

1. Turn ignition switch OFF.
2. Disconnect AV control unit and display connector.
3. Check continuity as follows.

- **When the screen looks bluish**

Terminals				Continuity
AV control unit		Display		
Connector	Terminal (Wire color)	Connector	Terminal (Wire color)	
M78	18 (R/L)	M82	1 (R/L)	Yes
	14	M82	4	Yes

Terminals			Continuity
(+)		(-)	
Connector	Terminal (Wire color)		
M78	14, 18 (R/L)	Ground	No

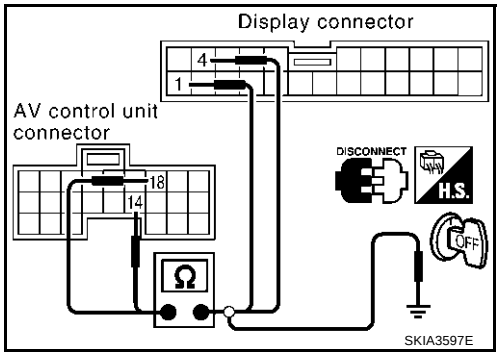

- **When the screen looks reddish**

Terminals				Continuity
AV control unit		Display		
Connector	Terminal (Wire color)	Connector	Terminal (Wire color)	
M78	21 (R/W)	M82	2 (R/W)	Yes
	14	M82	4	Yes

Terminals			Continuity
(+)		(-)	
Connector	Terminal (Wire color)		
M78	14, 21 (R/W)	Ground	No

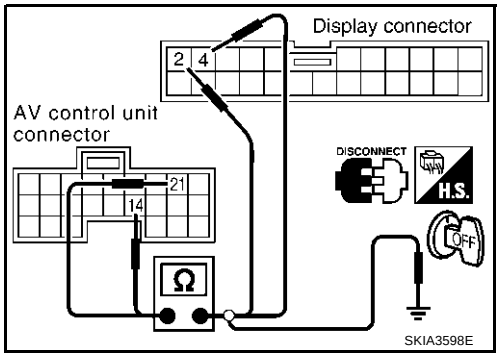

- **When the screen looks yellowish**

Terminals				Continuity
AV control unit		Display		
Connector	Terminal (Wire color)	Connector	Terminal (Wire color)	
M78	24 (B)	M82	3 (B)	Yes
	14	M82	4	Yes

Terminals			Continuity
(+)		(-)	
Connector	Terminal (Wire color)		
M78	14, 24 (B)	Ground	No

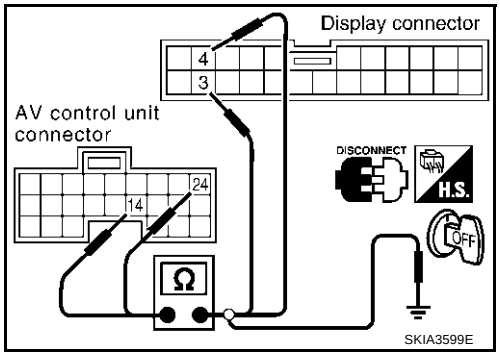

OK or NG

OK >> GO TO 3.

NG >> ● Check connector housings for disconnected or loose terminals.
● Repair harness or connector.

3. CHECK RGB SIGNAL

1. Connect AV control unit and display connector.
2. Turn ignition switch ON.
3. Display “Color bar” by “CONFIRMATION/ADJUSTMENT” mode.
4. Check the following with CONSULT-II or oscilloscope.

- **When the screen looks bluish**

Voltage signal between AV control unit harness connector M78 terminal 18 (R/L) and 14.

18 (R/L) - 14 : **Refer to DI-119, "Terminals and Reference Value for AV Control Unit"** .

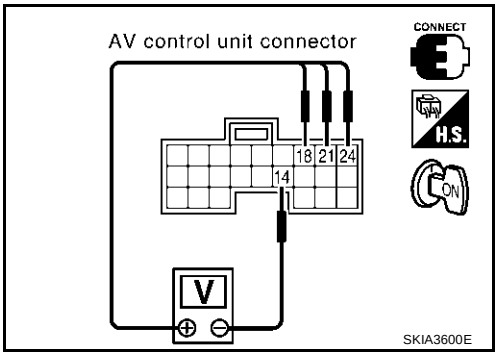

- **When the screen looks reddish**

Voltage signal between AV control unit harness connector M78 terminal 21 (R/W) and 14.

21 (R/W) - 14 : **Refer to DI-119, "Terminals and Reference Value for AV Control Unit"** .

- **When the screen looks yellowish**

Voltage signal between AV control unit harness connector M78 terminal 24 (B) and 14.

24 (B) - 14 : **Refer to DI-119, "Terminals and Reference Value for AV Control Unit"** .

OK or NG

OK >> Replace display.
NG >> Replace AV control unit.

RGB Screen Is Rolling

AKS004OQ

1. CHECK HARNESS

1. Disconnect AV control unit and display connector.
2. Check continuity between AV control unit and ground.

Terminals			Continuity
(+)		(-)	
Connector	Terminal (Wire color)		
M78	15 (G)	Ground	No
	10		

3. Check continuity between AV control unit and display.

Terminals				Continuity
AV control unit		Display		
Connector	Terminal (Wire color)	Connector	Terminal (Wire color)	
M78	15 (G)	M82	7 (G)	Yes
	10		4	

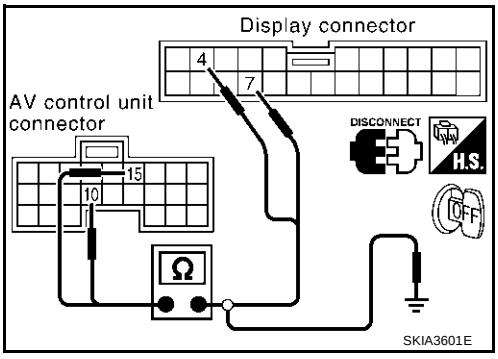

OK or NG

OK >> GO TO 2.
NG >> ● Check connector housings for disconnected or loose terminals.
● Repair harness or connector.

2. CHECK RGB SYNCHRONIZING SIGNAL

1. Connect AV control unit and display connector.
2. Turn ignition switch ON.
3. Check voltage between AV control unit harness connector M78 terminal 15 (G) and 10.

15 (G) - 10 **: Refer to DI-119, "Terminals and Reference Value for AV Control Unit" .**

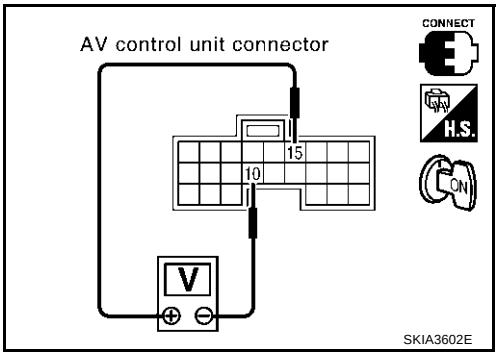

OK or NG

OK >> Replace display.
NG >> Replace AV control unit.

No A/C Display is Shown

AKS004OR

1. CHECK HARNESS

1. Disconnect A/C auto amp. connector and AV control unit connector.
2. Check continuity between A/C auto amp. harness connector M119 terminal 9 (W) and AV control unit harness connector M77 terminal 44 (W).

Continuity should exist.

3. Check continuity between A/C auto amp. harness connector M119 terminal 20 (B) and AV control unit harness connector M77 terminal 45 (B).

Continuity should exist.

4. Check continuity between AV control unit harness connector M77 terminals 44 (W), 45 (B) and ground.

Continuity should not exist.

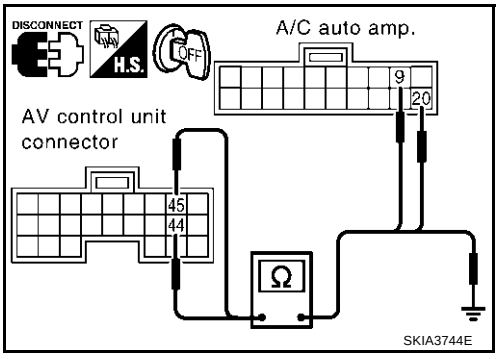

Ok or NG

OK >> GO TO 2.
NG >> ● Check connector housings for disconnected or loose terminals.
● Repair harness or connector.

2. CHECK A/C-AV, AC-CLK COMMUNICATION SIGNAL

1. Connect A/C auto amp. connector.
2. Turn ignition switch ON.
3. Check voltage between AV control unit harness connector M77 terminals 44 (W), 45 (B) and ground.

Approx. 3.5V or more.

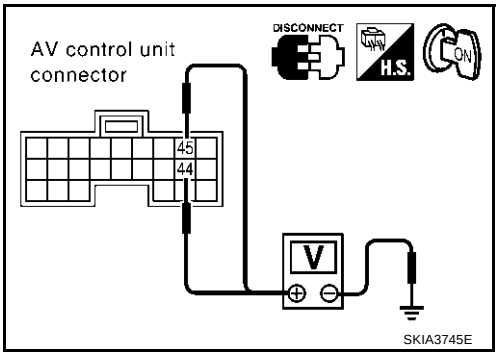

OK or NG

OK >> GO TO 3.
NG >> Replace A/C auto amp.

3. CHECK A/C-AV, AC-CLK COMMUNICATION SIGNAL

1. Connect AV control unit connector.
2. Turn ignition switch ON.
3. Check voltage signal between AV control unit harness connector M77 terminals 44 (W), 45 (B) and ground.

44 (W), 45 (B) - Ground **:Refer to DI-119, "Terminals and Reference Value for AV Control Unit"**

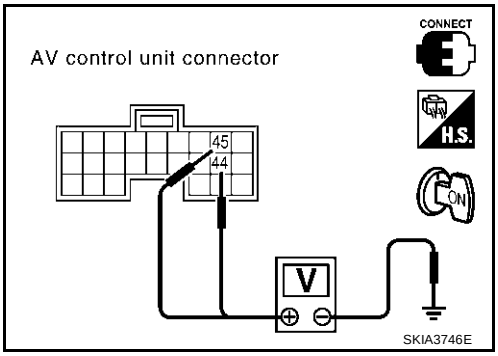

OK or NG

OK >> Replace A/C auto amp.
NG >> Replace AV control unit.

A/C Operation Is Not Possible

AKS004OS

1. CHECK HARNESS

1. Disconnect A/C auto amp. connector and AV control unit connector.
2. Check continuity between A/C auto amp. harness connector M119 terminal 10 (R) and AV control unit harness connector M77 terminal 43 (R).

Continuity should exist.

3. Check continuity between A/C auto amp. harness connector M119 terminal 20 (B) and AV control unit harness connector M77 terminal 45 (B).

Continuity should exist.

4. Check continuity between AV control unit harness connector M77 terminals 43 (R), 45 (B) and ground.

Continuity should not exist.

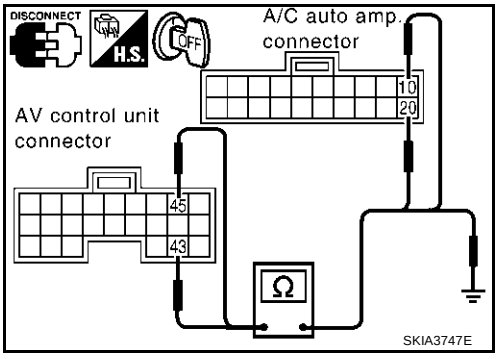

OK or NG

OK >> GO TO 2.
NG >> ● Check connector housings for disconnected or loose terminals.
● Repair harness or connector.

2. CHECK AV-A/C, AC-CLK COMMUNICATION SIGNAL

1. Connect A/C auto amp. connector.
2. Turn ignition switch ON.
3. Check voltage between AV control unit harness connector M77 terminal 43 (R) and ground.

Approx. 3.5V or more.

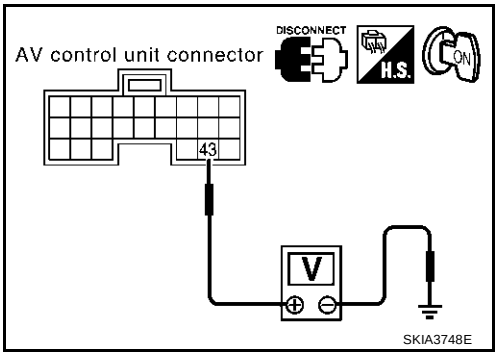

OK or NG

OK >> GO TO 3.
NG >> Replace A/C auto amplifier.

3. CHECK AV-A/C, AC-CLK COMMUNICATION SIGNAL

1. Connect AV control unit connector.
2. Turn ignition switch ON.
3. Check voltage signal between AV control unit harness connector M77 terminals 43, 45 and ground with CONSULT-II or oscilloscope.

43 (R), 45 (B) - Ground **:Refer to DI-119, "Terminals and Reference Value for AV Control Unit"**

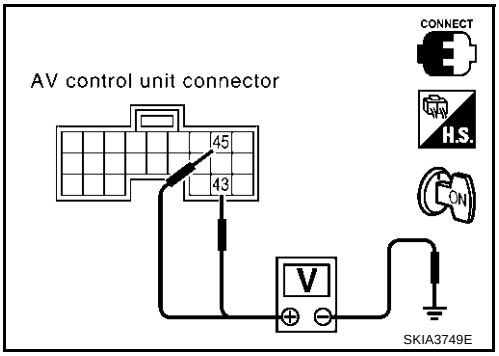

OK or NG

OK >> Replace A/C auto amp.
NG >> Replace AV control unit.

No Fuel Information Is Displayed/No Warning Message Is Displayed

AKS0040G

1. CHECK HARNESS

1. Disconnect connectors of AV control unit, combination meter and BCM.
2. Check continuity between AV control unit harness connector M77 terminal 34 (LG) and combination meter harness connector M42 terminal 56 (LG).

Continuity should exist.

3. Check continuity between AV control unit harness connector M77 terminal 35 (PU) and combination meter harness connector M42 terminal 57 (PU).

Continuity should exist.

4. Check continuity between AV control unit harness connector M77 terminals 34 (LG), 35 (PU) and ground.

Continuity should not exist.

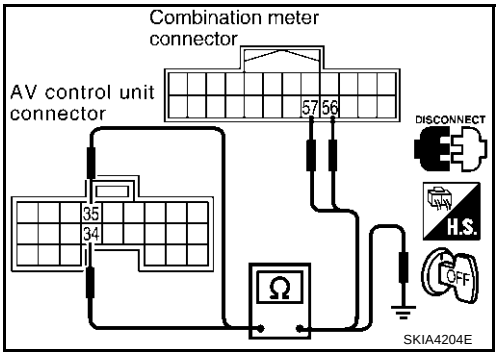

OK or NG

OK >> GO TO 2.
NG >> ● Check connector housings for disconnected or loose terminals.
● Repair harness or connector.

2. CHECK COMMUNICATION SIGNAL (AV-ME)

1. Connect connectors of combination meter, BCM and AV control unit.
2. Turn ignition switch ON.
3. Check voltage signal between AV control unit harness connector M77 terminal 34 (LG) and ground with CONSULT-II or oscilloscope.

34 (LG) - Ground **: Refer to DI-119, "Terminals and Reference Value for AV Control Unit" .**

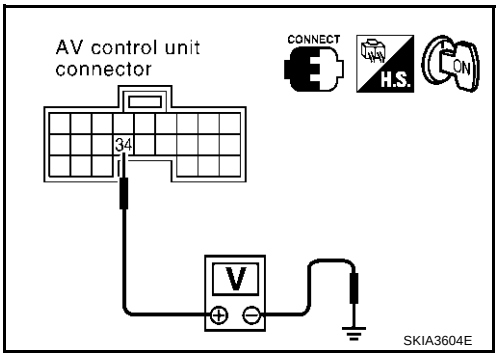

OK or NG

OK >> GO TO 3.
NG >> Replace AV control unit.

3. CHECK COMMUNICATION SIGNAL (ME-AV)

1. Turn ignition switch ON and display “VEHICLE ELECTRONIC SYSTEMS” screen.
2. Check voltage signal between AV control unit harness connector M77 terminal 35 (PU) and ground with CONSULT-II or oscilloscope.

35 (PU) - Ground **: Refer to DI-119, "Terminals and Reference Value for AV Control Unit" .**

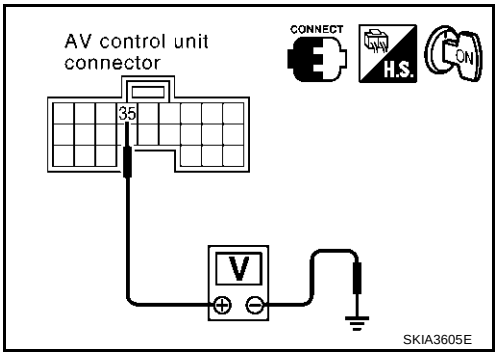

OK or NG

OK >> Replace AV control unit.
NG >> Replace combination meter.

AKS004OT

Vehicle Condition Setting Is Not Possible

1. CHECK HARNESS

1. Disconnect connectors of AV control unit, combination meter and BCM.
2. Check continuity AV control unit harness connector M77 terminal 34 (LG) and BCM harness connector M4 terminal 31 (LG).

Continuity should exist.

3. Check continuity AV control unit harness connector M77 terminal 35 (PU) and BCM harness connector M4 terminal 30 (PU).

Continuity should exist.

4. Check continuity between AV control unit harness connector M77 terminals 34 (LG), 35 (PU) and ground.

Continuity should not exist.

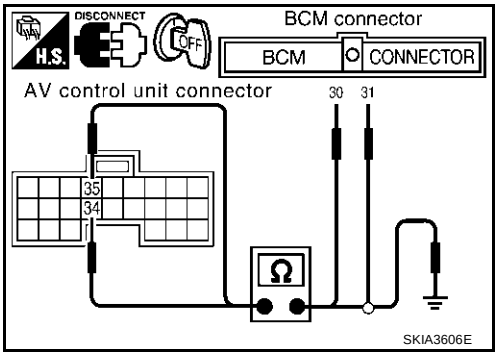

OK or NG

OK >> GO TO 2.
NG >> ● Check connector housings for disconnected or loose terminals.
● Repair harness or connector.

2. CHECK COMMUNICATION SIGNAL (AV-ME)

1. Connect connectors of AV control unit, combination meter and BCM.
2. Turn ignition switch ON.
3. Check voltage signal between AV control unit harness connector M77 terminal 34 (LG) and ground with CONSULT-II or oscilloscope.

34 (LG) - Ground **: Refer to DI-119, "Terminals and Reference Value for AV Control Unit" .**

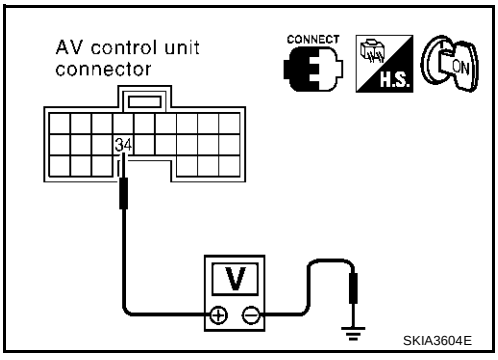

OK or NG

OK >> GO TO 3.
NG >> Replace AV control unit.

3. CHECK COMMUNICATION SIGNAL (ME-AV)

1. Turn ignition switch ON and display "VEHICLE ELECTRONIC SYSTEMS" screen.
2. Check voltage signal between AV control unit harness connector M77 terminal 35 (PU) and ground with CONSULT-II or oscilloscope.

35 (PU) - Ground **: Refer to DI-119, "Terminals and Reference Value for AV Control Unit" .**

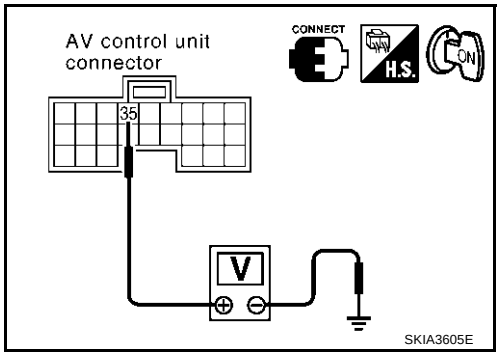

OK or NG

OK >> Replace AV control unit.
NG >> Replace BCM.

Multifunction Switch Does Not Operate

AKS004DJ

1. MULTIFUNCTION SWITCH SELF-DIAGNOSIS

Perform multifunction switch self-diagnosis. Refer to DI-136, "Multifunction Switch Self-Diagnosis Function" .

Is self-diagnosis result OK?

OK >> GO TO 2.
NG >> Replace multifunction switch.

2. CHECK POWER AND GROUND CIRCUIT

Check power and ground circuit. Refer to DI-139, "Inspection of Multifunction Switch for Power Supply and Ground Circuit" .

OK or NG

OK >> GO TO 3.
NG >> Repair harness or connector.

3. COMMUNICATION CIRCUIT SELF-DIAGNOSIS

Perform the self-diagnosis mode in the self-diagnosis function (If the self-diagnosis cannot be activated with the multifunction switch, check with CONSULT-II). Refer to DI-127, "Self-Diagnosis Mode" .

Is self-diagnosis result OK?

OK >> Replace display.
NG >> With the self-diagnosis results, check the malfunction part.

Multifunction Switch Indicator Does Not illuminate

AKS004DK

1. MULTIFUNCTION SWITCH SELF-DIAGNOSIS

Perform the multifunction switch self-diagnosis. Refer to DI-136, "Multifunction Switch Self-Diagnosis Function" .

Is the self-diagnosis result OK?

OK >> Replace switch of the malfunctioning indicator.
NG >> Replace multifunction switch.

Removal and Installation of Display

AKS0040K

REMOVAL

1. Remove cluster lid C. Refer to IP-10, "INSTRUMENT PANEL ASSEMBLY" .
2. Remove screws (4), and remove display.

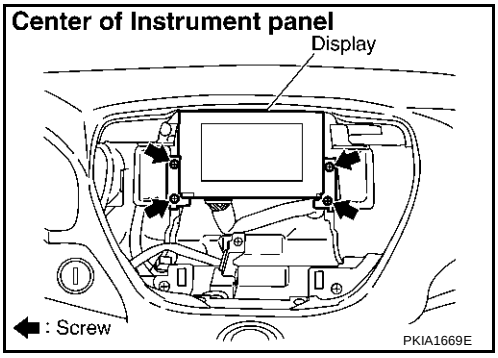

3. Remove screws (4), and remove bracket.

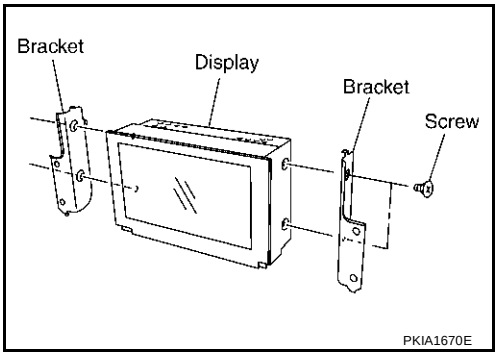

INSTALLATION

Install in the reverse order of removal.

Disassembly and Assembly of Multifunction Switch

AKS0040L

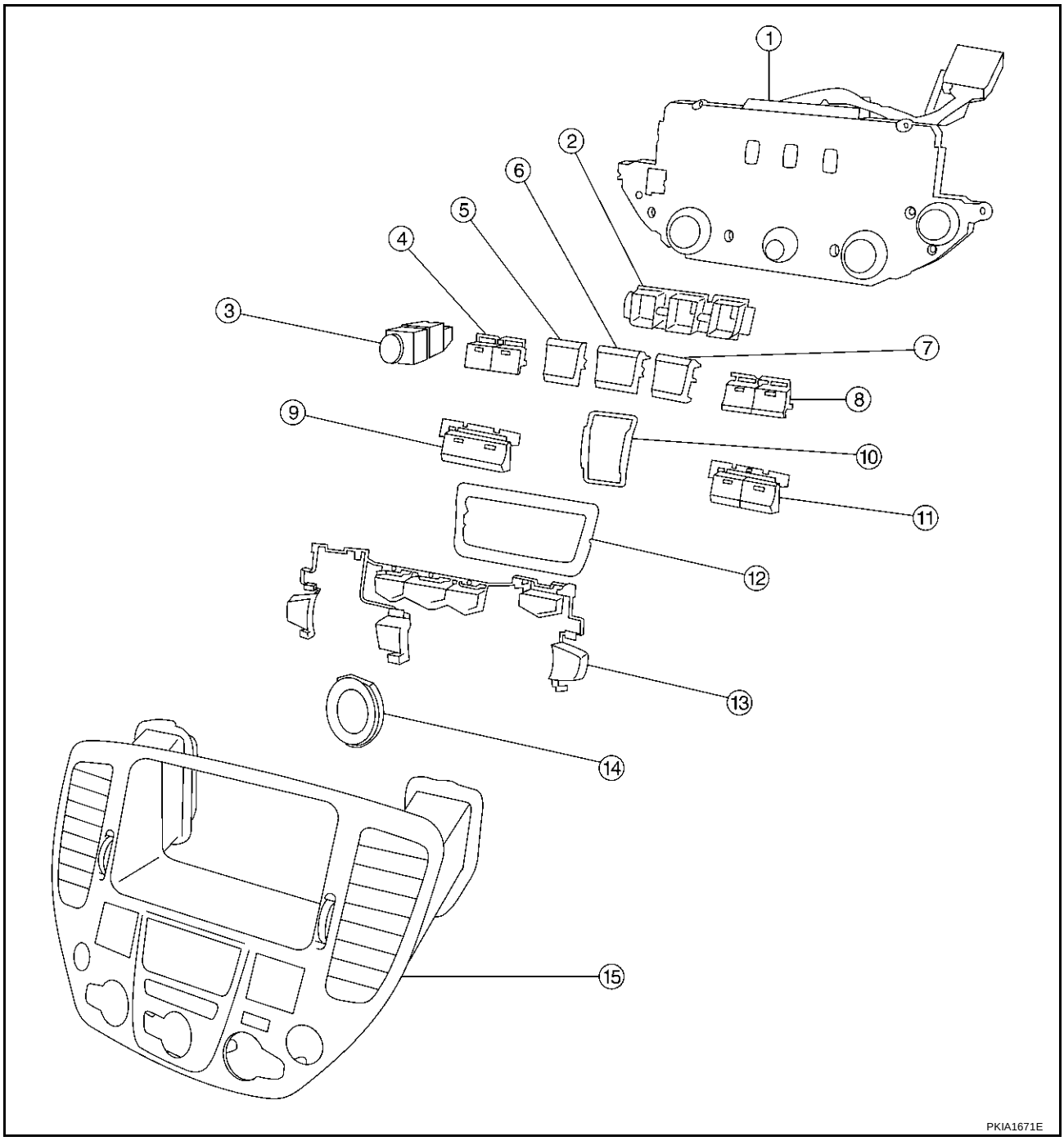

1. Multifunction switch	2. Escutcheon	3. Hazard switch
4. Defroster, rear defogger switch	5. Function switch	6. Function switch
7. Function switch	8. TAPE and DISC switch	9. A/C switch
10. Escutcheon	11. AM and FM switch	12. Escutcheon
13. Switch assembly	14. Escutcheon	15. Cluster lid C

1. Remove screw (8).
2. Remove switches.

Removal and Installation of AV Control Unit

AKS0040M

REMOVAL

1. Remove cluster lid C. Refer to IP-10, "INSTRUMENT PANEL ASSEMBLY" .
2. Remove warning chime. Refer to DI-71, "Removal and Installation of Warning Chime" .
3. Remove tire pressure warning control unit. Refer to WT-8, "TIRE PRESSURE WARNING CONTROL UNIT" .
4. Remove screws (2), and remove AV control unit with power tool.

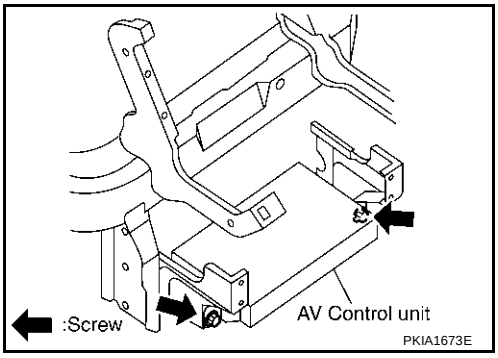

5. Remove screws (4), and remove bracket.

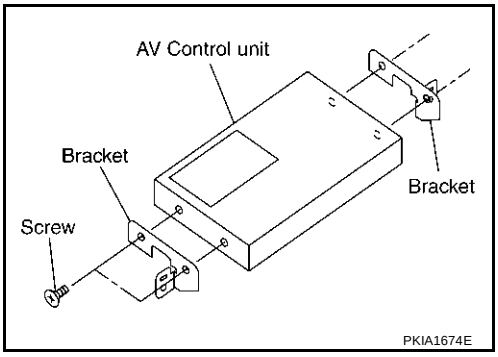

INSTALLATION

Install in the reverse order of removal.

CLOCK

PFP:25820

Wiring Diagram — CLOCK —

AKS002K9

DI-CLOCK-01

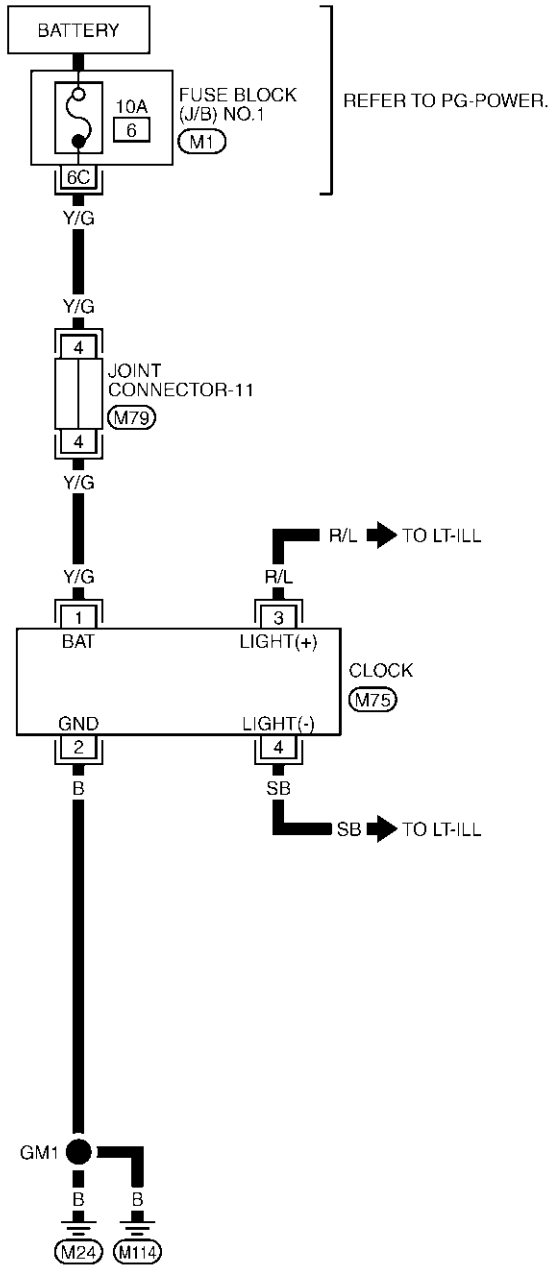

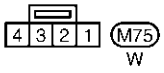

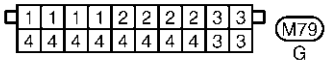

REFER TO THE FOLLOWING.

M1 -FUSE BLOCK-JUNCTION BOX (J/B) NO.1

TKWM0093E

Removal and Installation

AKS002KA

REMOVAL

1. Remove cluster lid C, refer to IP-10, "INSTRUMENT PANEL ASSEMBLY" .
2. Remove screws (2), and remove clock.

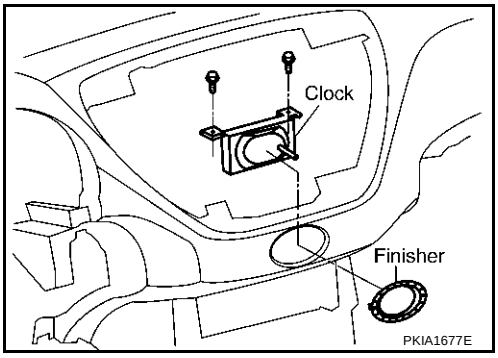

INSTALLATION

Install in the reverse order of removal.

VOICE ACTIVATED CONTROL SYSTEM

PFP:28337

System Description

AKS004E8

OUTLINE

- The VACS (Voice-Activated Control System) provides a safe and convenient way of controlling vehicle systems such as the audio, auto A/C and navigation (if so equipped). The system is controlled by the PTT (Push to talk) button. Voice commands are picked up by a microphone. When giving a command, voice feedback will be heard through the speaker, and messages will be shown on the display. Voice feedback can be turned off. Personal directories of nametags for radio station presets can be created, and spoken command help is provided.
- Refer to Owner's Manual for voice activated control system operating instructions.

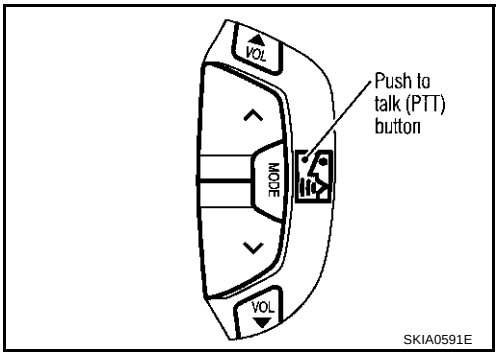

Power is supplied at all times.

- through 15A fuse [No. 52, located in fuse, fusible link and relay block (J/B)].
- to Voice Activated Control Module terminal 13.

With the ignition switch in the ACC or ON position, power is supplied.

- through 10A fuse [No. 21, located in the fuse block (J/B) NO. 1].
- to Voice Activated Control Module terminal 20.

Ground is also supplied

- to Voice Activated Control Module terminal 14
- through grounds B17 and B57.

VOICE ACTIVATED CONTROL FUNCTION

When PTT switch pushed ON, signal is sent

- from steering switch terminal 2
- to multifunction switch terminal 7, then
- via multifunction switch, display and AV and NAVI control unit terminals 47 and 48 (with navigation system) or AV control unit terminals 49 and 50 (without navigation system) with AV communication line
- to voice activated control module terminals 35 and 36.

Voice activated control module displays "LISTENING" on screen when PTT switch is ON.
When any voice is input into microphone, voice signal is sent

- from microphone terminals 4 and 5
- to voice activated control module terminals 33 and 34.

When voice activated control module identifies voice signal as a command, it sends the signal

- form voice activated control module terminals 35 and 36
- to AV and NAVI control unit terminals 47 and 48 (with navigation system) or AV control unit (without navigation system) terminals 49 and 50 with AV communication line.

Then AV and NAVI control unit (with navigation system) or AV control unit (without navigation system) sends operational signal

- to display and audio unit and performs the voice command.

While voice activated control system is in operation, voice activated control module sends voice signal

- from voice activated control module terminals 25 and 26
- to BOSE speaker amp. terminals 26 and 42, and guides various operations.

Also at the same time voice activated control module sends mute signal

- from voice activated control module terminal 27
- to audio unit terminal 9.

in order to prevent any noise input into microphone.

AV COMMUNICATION LINE

Voice Activated Control Module is connected to the following units through AV Communication Line. Each unit transmits/receives data with AV communication line.

- AV and NAVI control unit (with navigation system)
- AV control unit (without navigation system)
- Display
- Audio unit
- Multifunction switch

Schematic

AKS004E9

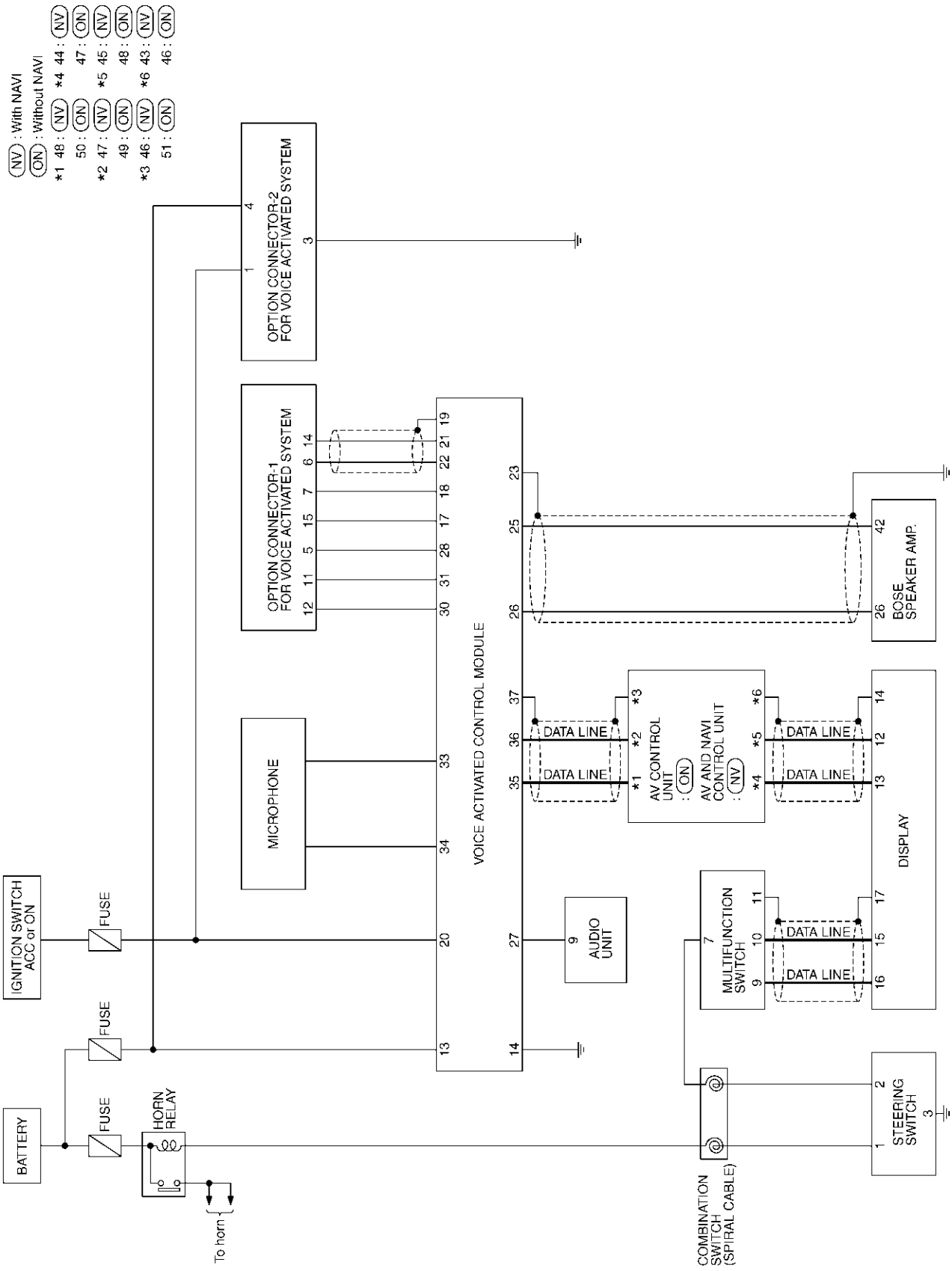

Wiring Diagram — VOICE —

AKS004EA

DI-VOICE-01

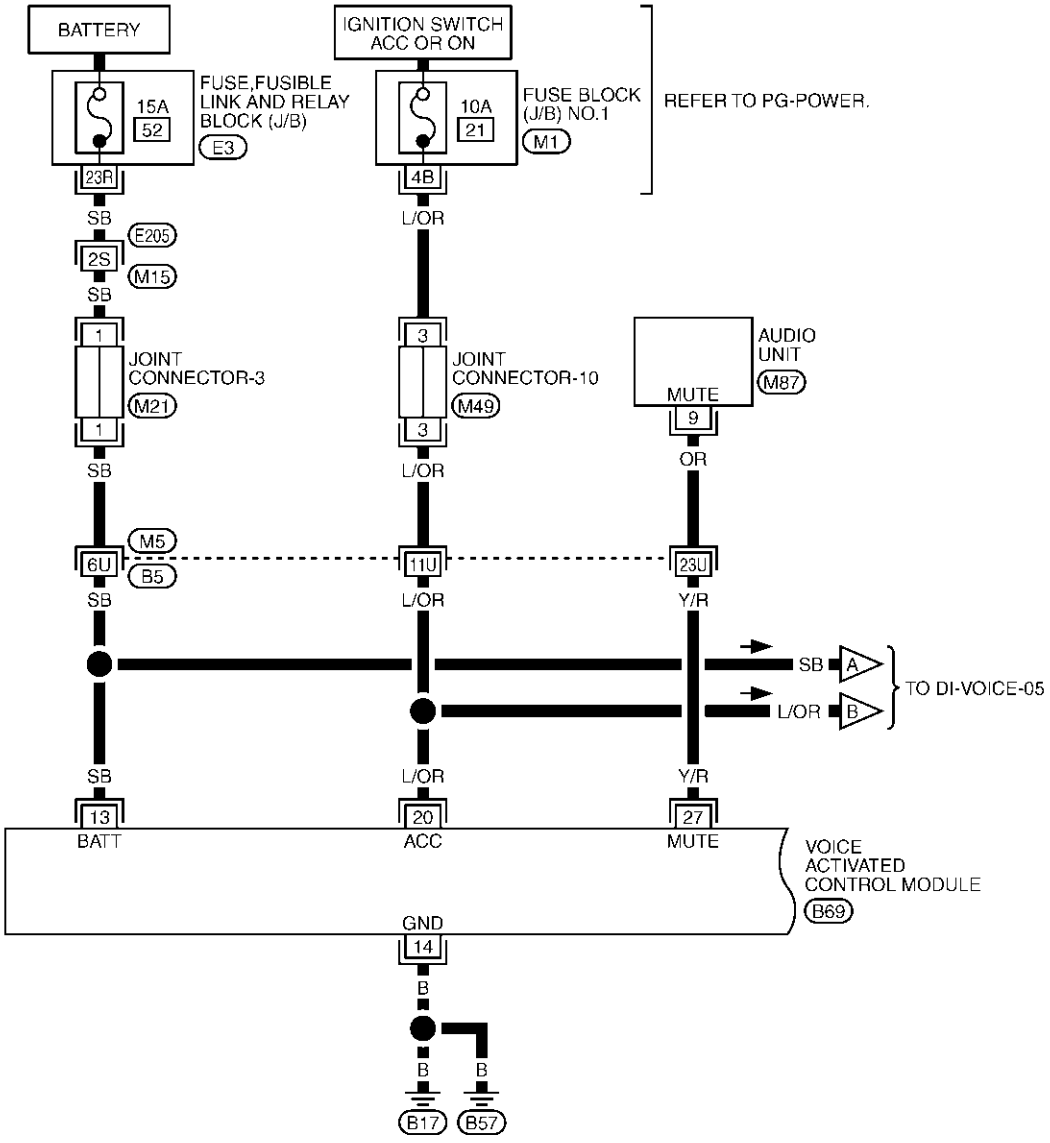

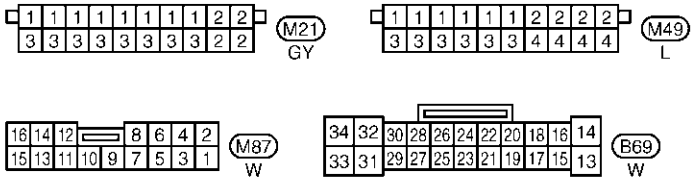

REFER TO THE FOLLOWING.

M5 , E205 -SUPER MULTIPLE JUNCTION (SMJ)

M1 -FUSE BLOCK-JUNCTION BOX (J/B) NO.1

E3 -FUSE,FUSIBLE LINK AND RELAY BLOCK (J/B)

TKWA0621E

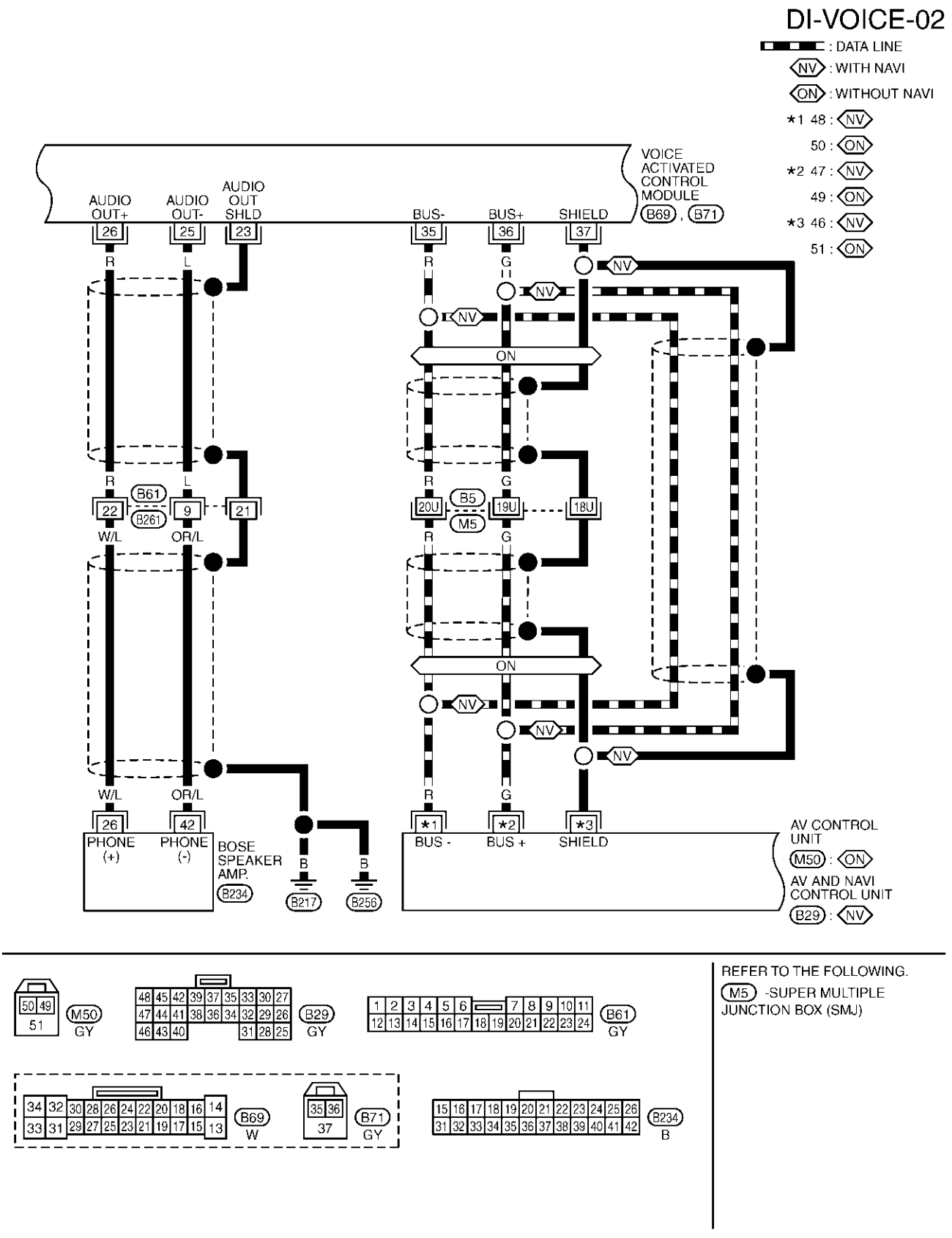
DI-VOICE-02
: DATA LINE
NV : WITH NAVI
ON : WITHOUT NAVI
*1 48 : NV
50 : ON
*2 47 : NV
49 : ON
*3 46 : NV
51 : ON
VOICE ACTIVATED CONTROL MODULE
B69 , B71
AUDIO OUT+
AUDIO OUT-
AUDIO OUT SHLD
BUS-
BUS+
SHIELD
26
25
23
35
36
37
R
L
G
NV
ON
B61
B261
22
9
21
W/L
OR/L
B5
M5
20U
19U
18U
PHONE (+)
PHONE (-)
42
BOSE SPEAKER AMP.
B234
B
B217
B256
*1
*2
*3
BUS -
BUS +
AV CONTROL UNIT
M50 : ON
AV AND NAVI CONTROL UNIT
B29 : NV
M50
GY
B29
GY
B61
GY
B69
W
B71
GY
B234
B
REFER TO THE FOLLOWING.
M5 -SUPER MULTIPLE JUNCTION BOX (SMJ)
TKWA0622E

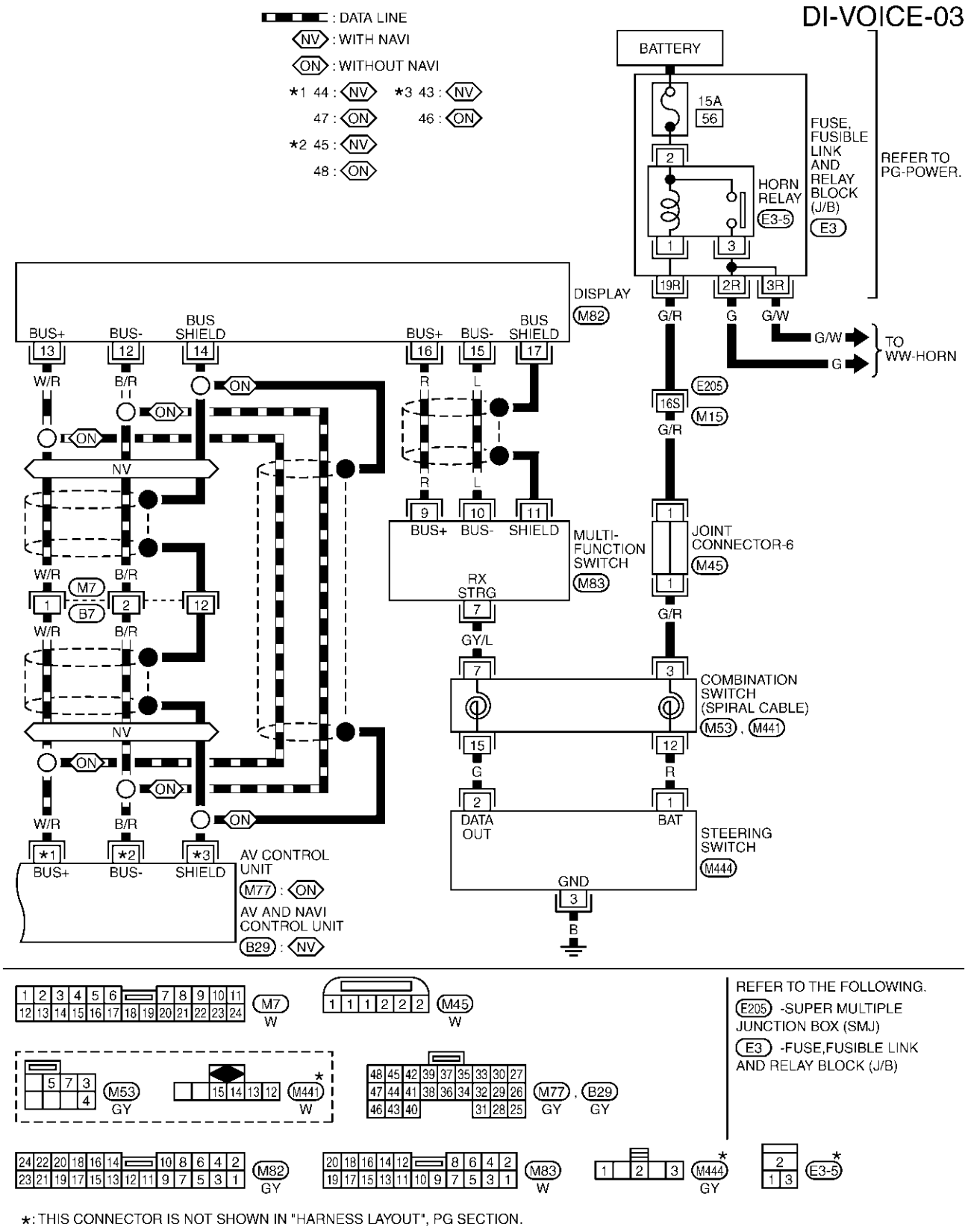
DI-VOICE-03
: DATA LINE
NV : WITH NAVI
ON : WITHOUT NAVI
*1 44 : NV
47 : ON
*2 45 : NV
48 : ON
*3 43 : NV
46 : ON
BATTERY
15A
56
FUSE, FUSIBLE LINK AND RELAY BLOCK (J/B)
E3
HORN RELAY
E3-5
REFER TO PG-POWER.
DISPLAY
M82
BUS+
BUS-
BUS SHIELD
TO WW-HORN
E205
16S
M15
MULTI-FUNCTION SWITCH
M83
RX STRG
JOINT CONNECTOR-6
M45
M7
B7
COMBINATION SWITCH (SPIRAL CABLE)
M53 , M441
DATA OUT
BAT
STEERING SWITCH
M444
GND
AV CONTROL UNIT
M77 : ON
AV AND NAVI CONTROL UNIT
B29 : NV
SHIELD
REFER TO THE FOLLOWING.
E205 -SUPER MULTIPLE JUNCTION BOX (SMJ)
E3 -FUSE,FUSIBLE LINK AND RELAY BLOCK (J/B)
M7 W
M45 W
M53 GY
M441 W
M77 GY , B29 GY
M82 GY
M83 W
M444 GY
E3-5
*: THIS CONNECTOR IS NOT SHOWN IN "HARNESS LAYOUT", PG SECTION.
TKWA0623E

DI-VOICE-04

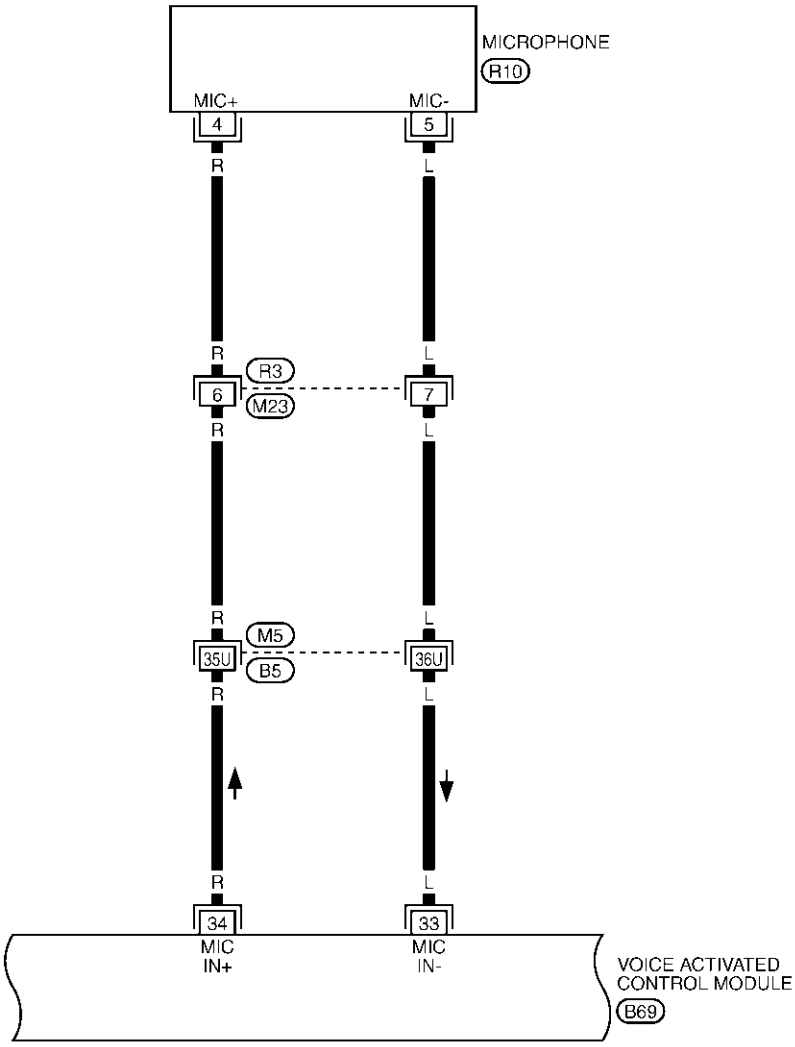

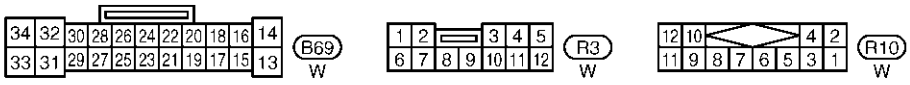

REFER TO THE FOLLOWING.
M5 -SUPER MULTIPLE JUNCTION (SMJ)

TKWA0624E

DI-VOICE-05

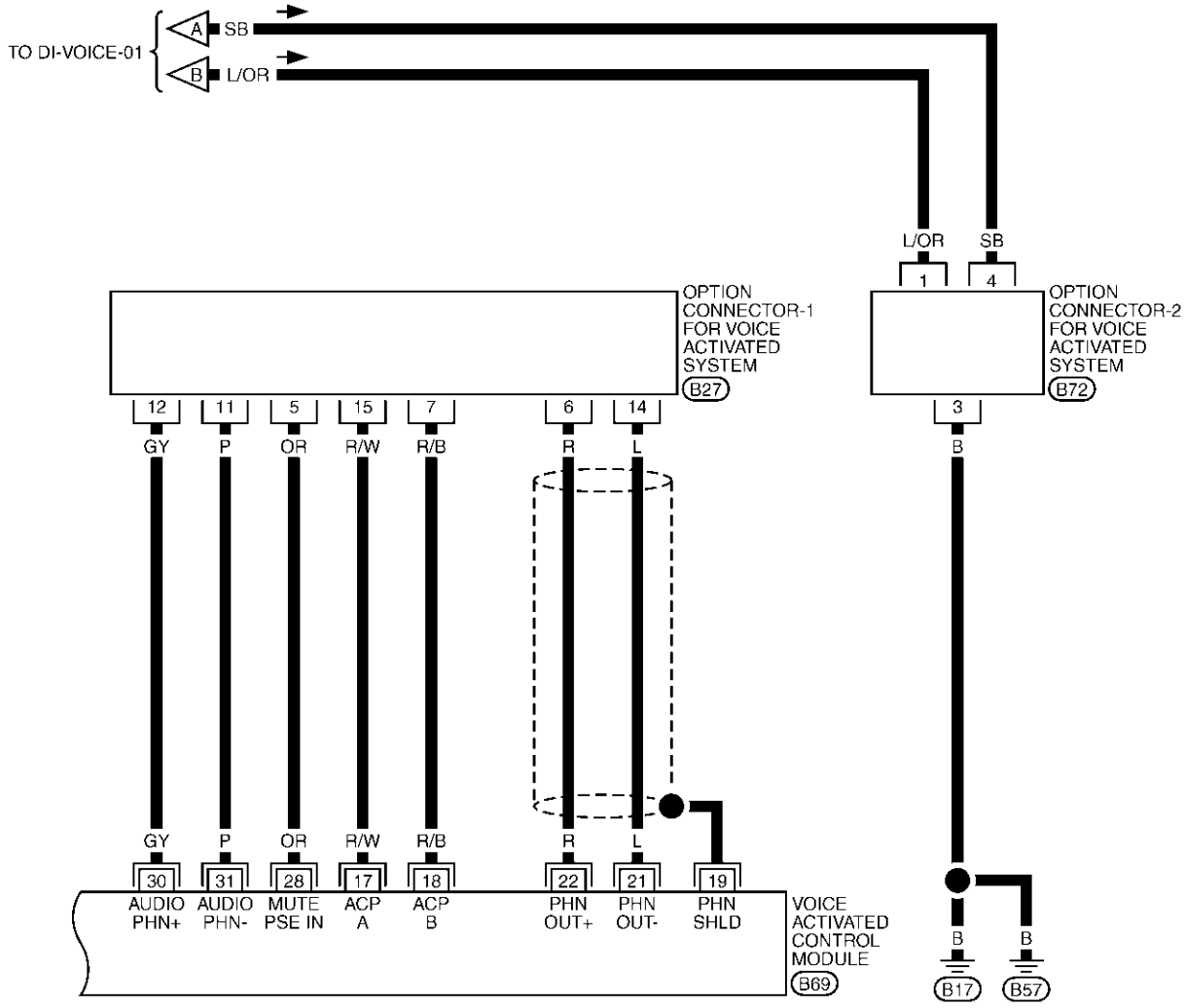

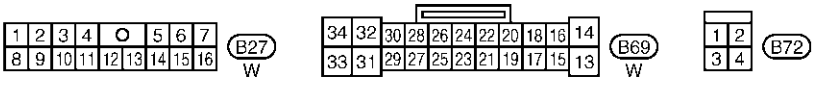

TKWA0625E

Terminals and Reference Values for Voice Activated Control Module

AKS004OU

Terminals				Item	Condition	Reference value
(+)		(–)				
Terminal No.	Wire color	Terminal	Wire color			
13	SB	Ground	–	Power source (BAT)	–	Battery voltage
14	B	Ground	–	Ground	–	Approx. 0V
20	L/OR	Ground	–	Ignition switch (ACC)	ACC	Battery voltage
23	–	–	–	Audio shield ground	–	–
25	L	23	–	Audio output (–)	Voice guide operates.	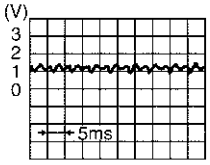 PKIA0355E
26	R	23	–	Audio output (+)		
27	Y/R	Ground	–	Mute	PTT switch (not operate → operate)	Approx. 5V → Approx. 0V
34	R	33	L	Mic input	Voice mic test operates.	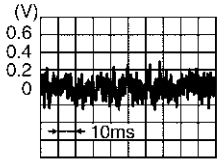 PKIA0356E
35	R	37	–	Communication signal (–)	–	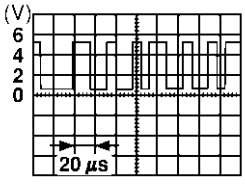 SKIA0176E
36	G	37	–	Communication signal (+)	–	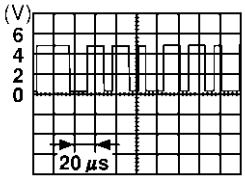 SKIA0175E
37	–	–	–	Shield ground	–	–

Component Parts and Harness Connector Location

AKS004EC

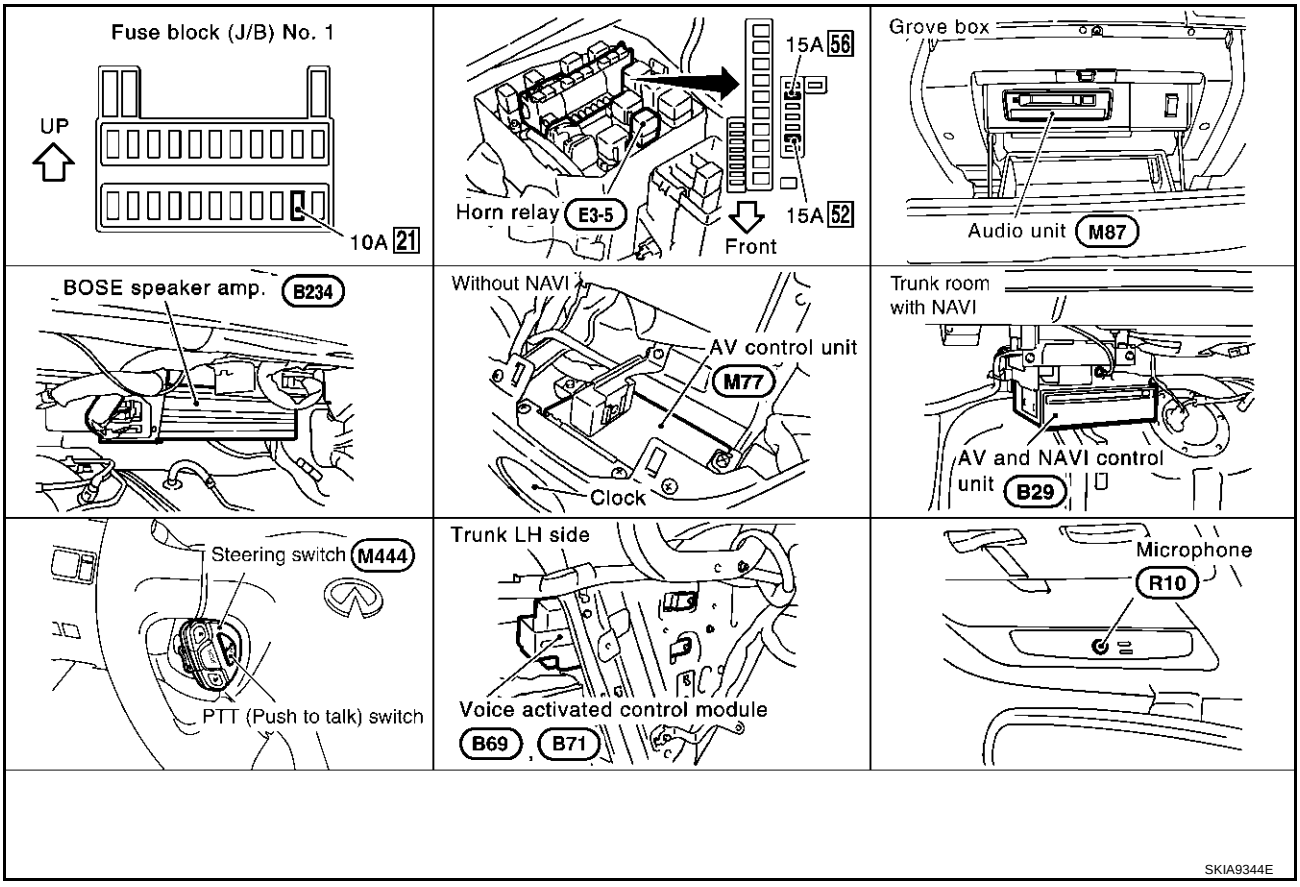

Trouble Diagnoses

AKS004ED

THIS CONDITION IS NOT MALFUNCTION

Example of Basic Operational Errors

The system should respond correctly to all voice commands. Follow the solutions given in this guide for the appropriate error when any of the following symptom is encountered.
Where the solutions are listed by number, try each solution in turn, starting with number one, until the symptom is resolved.

Symptom	Remedy
Displays “COMMAND NOT RECOGNIZED” or the system does not interpret the command correctly.	1. Ensure that the command is valid, see Command list (Refer to Owner’s Manual). 2. Ensure that the command is given after the tone while “ LISTENING” is displayed. 3. Speak clearly without pausing between words and at a level appropriate to the ambient noise level. 4. Ensure that the ambient noise level is not excessive, for example, windows open or defrost on. **NOTE:** If it is too noisy to use the microphone, it is likely that voice commands will not be recognized. 5. If optional words of the command have been omitted, then the command should be tried with these in place. 6. If a number of commands have been given in rapid succession resulting in the message “COMMAND NOT RECOGNIZED” to be displayed, then allow the system to recover (approximately one minute) before trying the command again. 7. If the system consistently does not recognize commands, the voice training procedure should be carried out to improve the recognition response for the speaker.
Displays “NO SPEECH DETECTED”.	1. Ensure that the command is given after the tone while “LISTENING” is displayed. 2. Ensure that the command is given within a maximum of five seconds from the end of the tone. **NOTE:** Be sure you know what to say before pressing the Voice button.
Displays “NAMETAG NOT UNIQUE”.	1. This response will be received when storing a nametag if the nametag being given has already been stored. This can be confirmed by giving the Radio Directory command. 2. If this response is received and the nametag has not been used already, then it is too similar to an existing nametag or voice grammar and an alternative should be used.
The system consistently selects the wrong nametag.	1. Ensure that the nametag requested matches what was originally stored. This can be confirmed by giving the Radio Directory command. 2. Delete one of the nametags being confused and replace it with a different nametag.

Self-Diagnosis Function

AKS004EE

DESCRIPTION

- Diagnosis function consists of the self-diagnosis mode, and the “CONFIRMATION/ADJUSTMENT” mode.
- Self-diagnosis mode checks for connection between AV and NAVI control unit (with navigation system) or AV control unit (without navigation system) and voice activated control module and analyzes each unit, then displays the results.
- “CONFIRMATION/ADJUSTMENT” function analyzes each microphone.

DIAGNOSIS ITEM

Mode		Description
Self-diagnosis		● Checks for the connections between AV and NAVI control unit or AV control unit and voice activated control module. ● Performs the unit diagnosis of voice activated control module.
CONFIRMATION/ ADJUSTMENT	Voice Mic. Test	● Checks microphone.

Self-Diagnosis Mode

AKS004EF

OPERATION PROCEDURE

- To start the self-diagnosis mode and to check the diagnosis result, refer to AV-68, "Self-Diagnosis Mode" (with navigation system), or DI-127, "Self-Diagnosis Mode" (without navigation system).

Confirmation/Adjustment Mode

AKS004EG

OPERATION PROCEDURE

1. Start the engine.
2. Turn the audio system off.
3. While pressing the “INFO” switch, turn the volume control dial clockwise or counterclockwise for 30 clicks or more.

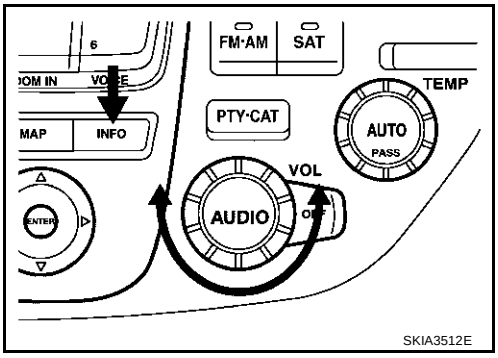

4. The initial trouble diagnosis screen will be shown, and items “SELF-DIAGNOSIS” and “CONFIRMATION/ADJUSTMENT” will become selective.
5. When “CONFIRMATION/ADJUSTMENT” is selected on the trouble diagnosis screen, the operation will enter the CONFIRMATION/ADJUSTMENT mode. In this mode, check and adjustment of each item will become possible.

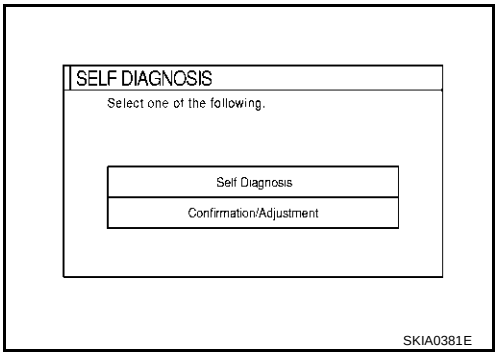

6. When “Voice Mic. Test” is selected with joystick, icon indicator turns on (green) and voice input into microphone is sent out through speakers.

   NOTE:
   Voice from speakers may sound echoic.

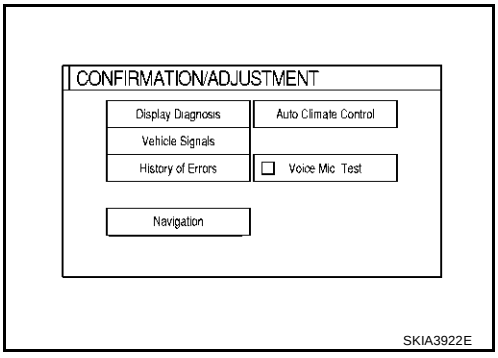

Power Supply and Ground Circuit Inspection

AKS004OV

1. CHECK FUSES

Check that any of the following fuses for voice activated control module is blown.

Unit	Power source	Fuse No.
Voice Activated Control Module	Battery	52
	Ignition switch ACC or ON	21

OK or NG

OK >> GO TO 2.
NG >> If fuse is blown, be sure to eliminate cause of malfunction before installing new fuse. Refer to PG-2, "POWER SUPPLY ROUTING" .

2. CHECK POWER SUPPLY CIRCUIT

Check voltage between voice activated control module harness connector B69 terminal 13 (SB), 20 (L/OR) and ground.

Terminals			Ignition switch position		
(+)		(-)	OFF	ACC	ON
Connector	Terminal (Wire color)				
B69	13 (SB)	Ground	Battery voltage	Battery voltage	Battery voltage
B69	20 (L/OR)	Ground	0V	Battery voltage	Battery voltage

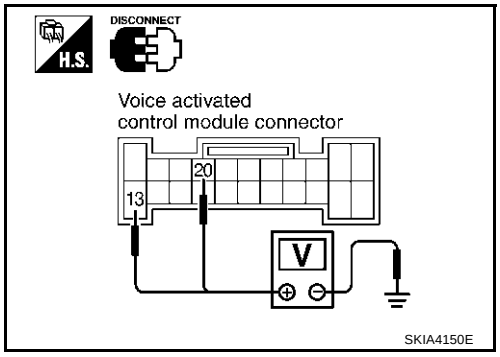

OK or NG

OK >> GO TO 3.
NG >> Check harness between voice activated control module and fuse.

3. CHECK GROUND CIRCUIT

Check continuity between voice activated control module harness connector B69 terminal 14 (B) and ground.

Continuity should exist.

OK or NG

OK >> Inspection end.
NG >> Repair harness or connector.

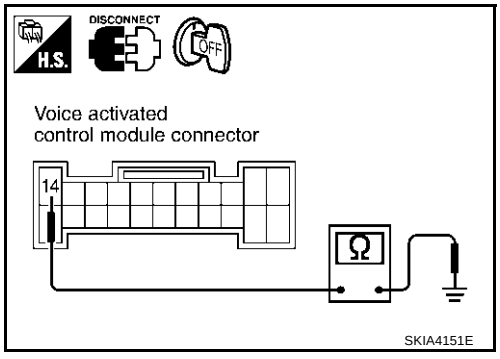

Voice Command Not Identified (With Voice Activated Control System in Operation)

AKS004OW

1. CHECK MICROPHONE OPERATION

- Select “Voice Mic. Test” of “CONFIRMATION/ADJUSTMENT” mode. Refer to DI-167, "Confirmation/Adjustment Mode" .
- Speak to microphone, and check if the sound is heard from (right) instrument speaker.

OK or NG

OK >> Replace voice activated control module.
NG >> GO TO 2.

2. CHECK MICROPHONE CIRCUIT

1. Disconnect voice activated control module connector and microphone connector.
2. Check the following.

- Continuity between voice activated control module harness connector B69 terminal 33 (L) and microphone connector R10 terminal 5 (L).

Continuity should exist.

- Continuity between voice activated control module harness connector B69 terminal 34 (R) and microphone harness connector R10 terminal 4 (R).

Continuity should exist.

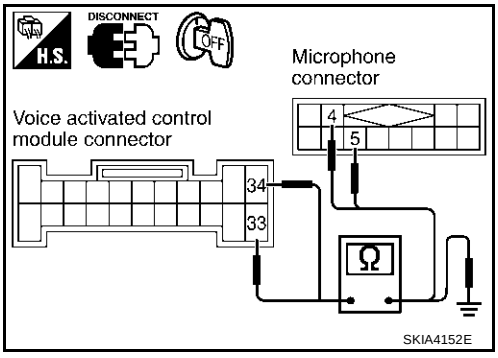

- Continuity between voice activated control module harness connector B69 terminal 33 (L), 34 (R) and ground.

Continuity should not exist.

OK or NG

OK >> GO TO 3.
NG >> Repair harness or connector.

3. CHECK MICROPHONE SIGNAL

1. Connect voice activated control module connector and microphone connector.
2. Turn ignition switch ON.
3. Speak to microphone and check signal between voice activated control module connector B69 terminal 34 (R) and 33 (L) with CONSULT-II or oscilloscope.

34 - 33 **: Refer to DI-164, "Terminals and Reference Values for Voice Activated Control Module" .**

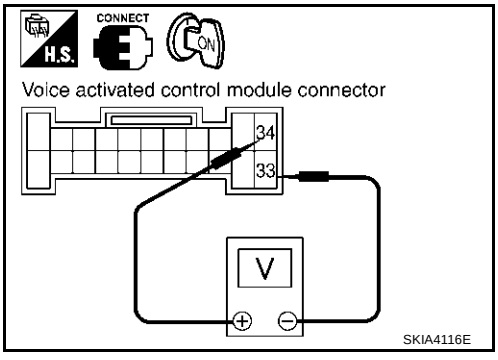

OK or NG

OK >> Replace voice activated control module.
NG >> Replace microphone.

No Guide Sound or Beeps

AKS004OX

1. CHECK GUIDE SOUND SETTING

Check volume setting of voice activated control system if set as 0 (zero).

OK or NG

OK >> GO TO 2.
NG >> Adjust volume.

2. CHECK BOSE SPEAKER AMP. CIRCUIT

1. Disconnect voice activated control module connector and BOSE speaker amp. connector.
2. Check the following.

– Continuity between voice activated control module harness connector B69 terminal 25 (L) and BOSE speaker amp. harness connector B234 terminal 42 (OR/L)

Continuity should exist.

– Continuity between voice activated control module harness connector B69 terminal 26 (R) and BOSE speaker amp. harness connector B234 terminal 26 (W/L)

Continuity should exist.

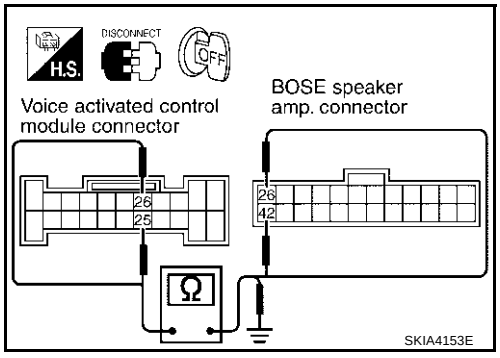

– Continuity between voice activated control module harness connector B69 terminal 25 (L), 26 (R) and ground

Continuity should not exist.

OK or NG

OK >> GO TO 3.
NG >> Repair harness or connector.

3. CHECK VOICE SIGNAL

1. Connect voice activated control module connector and BOSE speaker amp.
2. Turn ignition switch ON.
3. The Speaker Adaptation (SA) mode ON and voice guide signal sent out, check signal between voice activated control module harness connector B69 terminal 25 (L), 26 (R) and 23.

25 (L) - 23	**:Refer to DI-164, "Terminals and Reference Values for Voice Activated Control Module" .**
26 (R) - 23	

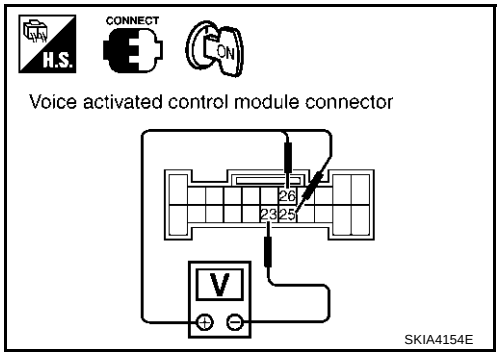

OK or NG

OK >> Replace BOSE speaker amp.
NG >> Replace voice activated control module.

Voice Activated Control System Not Starting PTT Switch Pushed ON

AKS004OY

1. CHECK PTT SWITCH OPERATION

Check PTT switch operation with self-diagnosis of multifunction switch. Refer to DI-136, "Multifunction Switch Self-Diagnosis Function" .

OK or NG

OK >> GO TO 2.
NG >> Replace steering switch.

2. CHECK MULTIFUNCTION SWITCH AND VOICE ACTIVATED CONTROL MODULE

Start self-diagnosis mode. Refer to AV-68, "Self-Diagnosis Mode" (with navigation system) or DI-127, "Self-Diagnosis Mode" (without navigation system).

Does self-diagnosis mode start?

YES >> GO TO 3.
NO >> Replace multifunction switch.

3. CHECK VOICE ACTIVATED CONTROL MODULE

Check voice activated control module with self-diagnosis mode started in previous step 2.

OK or NG

OK >>
- Replace AV and NAVI control unit (with navigation system), or
- Replace AV control unit (without navigation system).

NG >> GO TO 4.

4. CHECK POWER SUPPLY AND GROUND CIRCUIT

Check power supply and ground circuit of voice activated control module. Refer to DI-168, "Power Supply and Ground Circuit Inspection" .

OK or NG

OK >> GO TO 5.
NG >> Repair harness or connector.

5. CHECK AV COMMUNICATION LINE

1. Disconnect voice activated control module and AV and NAVI control unit (with navigation system) or AV control unit (without navigation system) connector.
2. Check the following.

– **With navigation system**

Terminals				Continuity
(+)		(–)		
Connector	Terminal (Wire color)	Connector	Terminal (Wire color)	
B71	35 (R)	B29	48 (R)	Yes
	36 (G)	B29	47 (G)	Yes
	37	B29	46	Yes
	35 (R)	B29	46	No
	36 (G)	B29	46	No

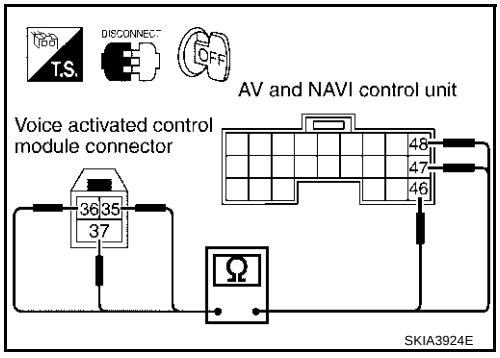

– **Without navigation system**

Terminals				Continuity
(+)		(–)		
Connector	Terminal (Wire color)	Connector	Terminal (Wire color)	
B71	35 (R)	M50	50 (R)	Yes
	36 (G)	M50	49 (G)	Yes
	37	M50	51	Yes
	35 (R)	M50	51	No
	36 (G)	M50	51	No

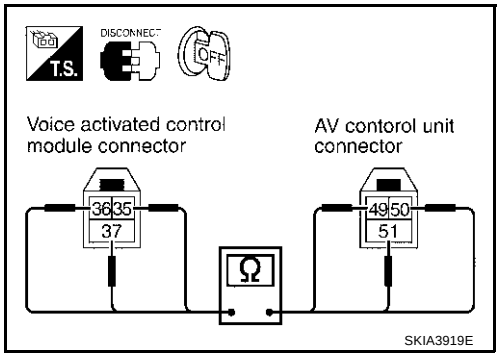

OK or NG

OK >> Replace voice activated control module.
NG >> Repair harness or connector.

Audio Not Muted with PTT Switch Pushed ON

AKS004OZ

1. CHECK AUDIO UNIT CIRCUIT

1. Disconnect voice activated control module connector and Audio unit connector.
2. Check the following.

– Continuity between voice activated control module harness connector B69 terminal 27 (Y/R) and Audio unit harness connector M87 terminal 9 (OR)

Continuity should exist.

– Continuity between voice activated control module harness connector B69 terminal 27 (Y/R) and ground

Continuity should not exist.

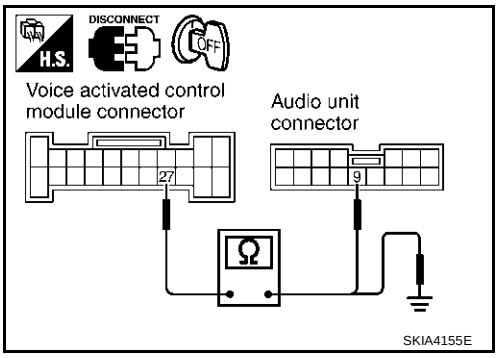

OK or NG

OK >> GO TO 2.
NG >> Repair harness or connector.

2. CHECK AUDIO UNIT MUTE SIGNAL

1. Connect voice activated control module connector and audio unit connector.
2. Turn ignition switch ON.
3. Check voltage between voice activated control module and ground.

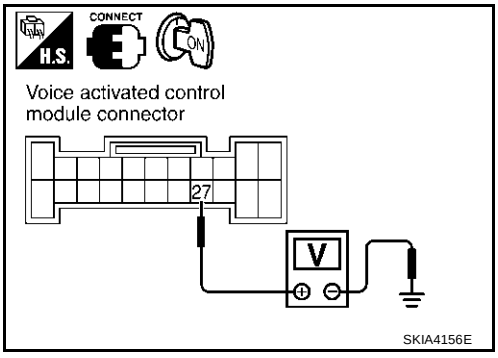

Terminals			PTT switch condition	Voltage (V)
(+)		(–)		
Connector	Terminal (Wire color)			
B69	27 (Y/R)	Ground	ON	Approx. 0
			OFF	Approx. 5

OK or NG

OK >> Replace audio unit.
NG >> Replace voice activated control module.

Audio Mute Not Released

AKS004P0

1. AUDIO UNIT MUTE SIGNAL CIRCUIT

1. Disconnect voice activated control module connector and audio unit connector.
2. Check continuity between audio unit harness connector M87 terminal 9 (OR) and ground.

Continuity should not exist.

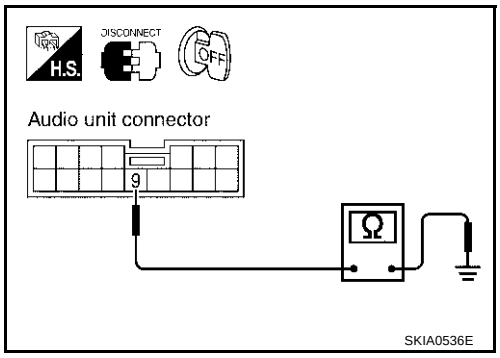

OK or NG

OK >> GO TO 2.
NG >> Repair and replace harness.

2. CHECK MUTE SIGNAL

1. Connect voice activated control module connector and audio unit connector.
2. Turn ignition switch ON.
3. Check the following.

Unit	Terminals (+) Connector	Terminals (+) Terminal (Wire color)	Terminals (–)	PTT switch condition	Voltage (V)
Voice activated control module	B69	27 (Y/R)	Ground	ON	Approx. 0
				OFF	Approx. 5
Audio unit	M87	9 (OR)		ON	Approx. 0
				OFF	Approx. 5

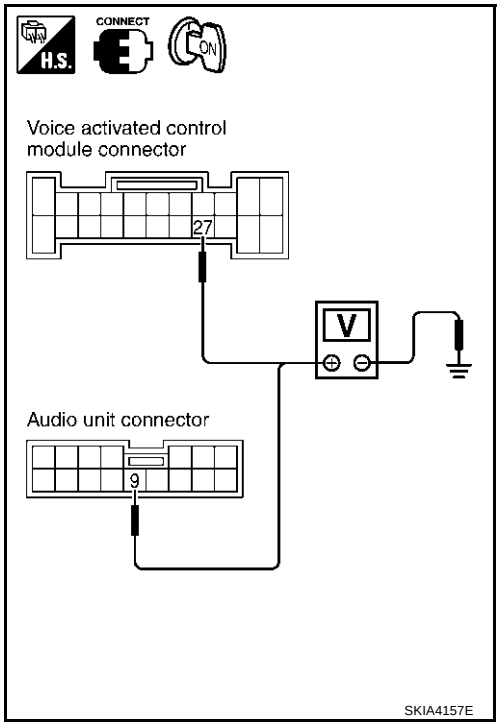

OK or NG

OK >> Replace audio unit.
NG >> Replace voice activated control module.

Removal and Installation for Voice Activated Control Module

AKS004EN

REMOVAL

1. Remove trunk side trim. Refer to EI-41, "TRUNK ROOM TRIM & TRUNK LID FINISHER" .
2. Remove voice activated control module.

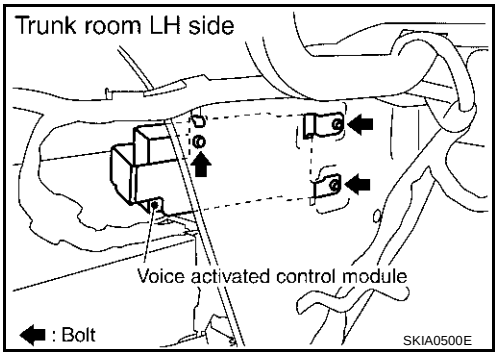

3. Remove bracket from voice activated control module.

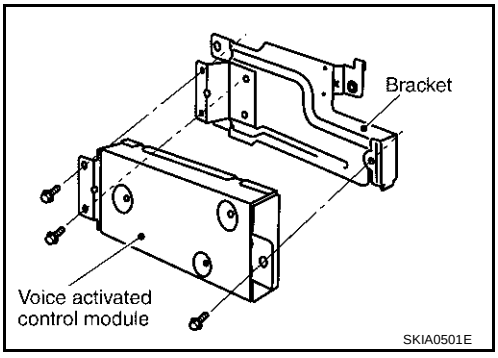

INSTALLATION

Install in the reverse order of removal.